LYOZ07

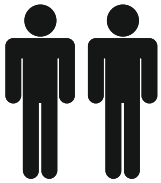

40 MIN

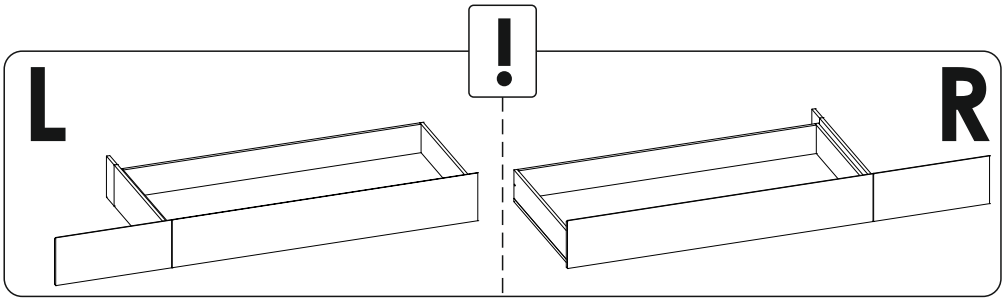

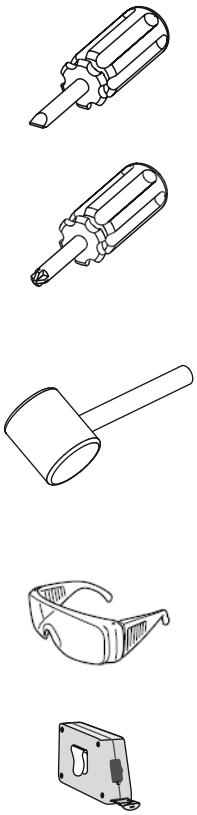

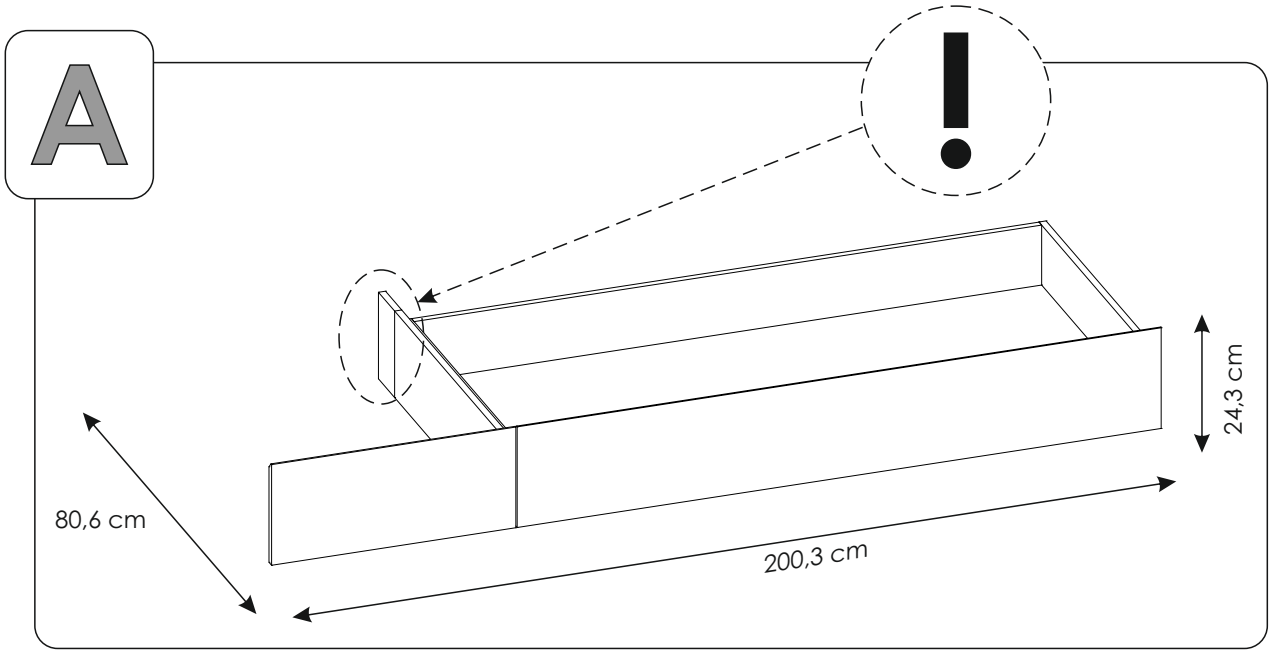

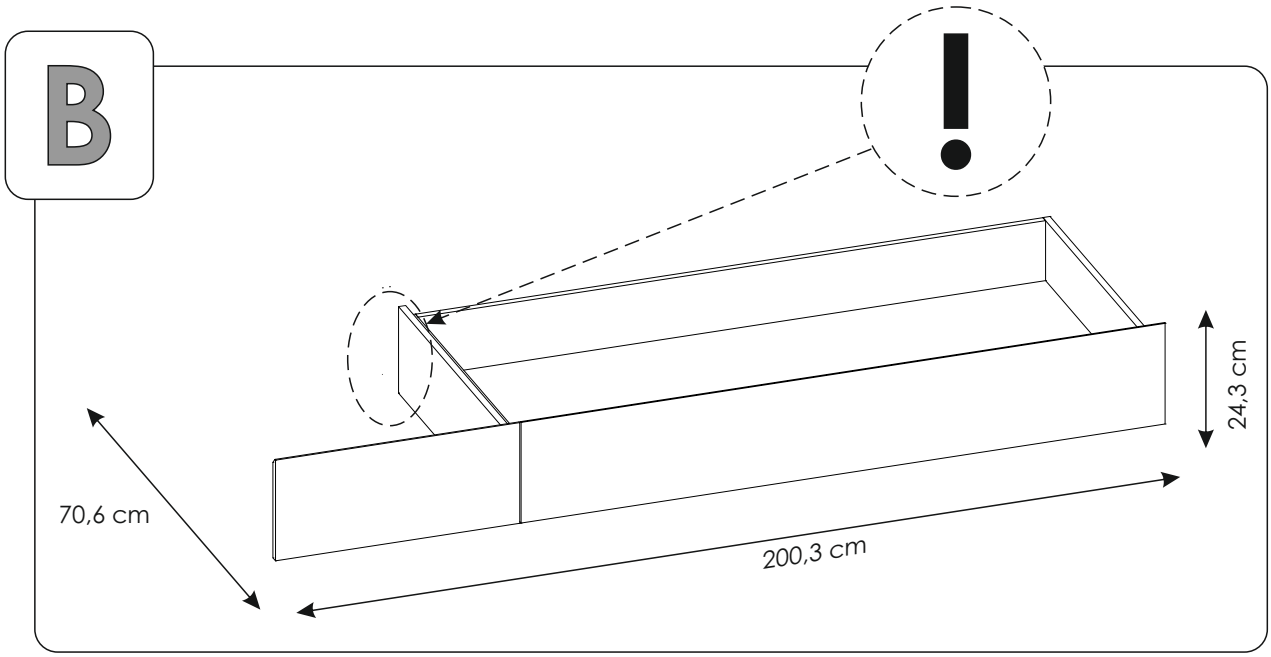

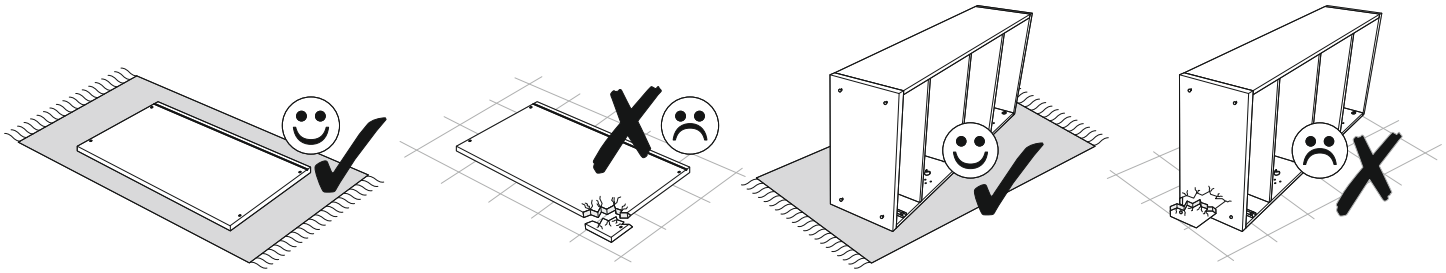

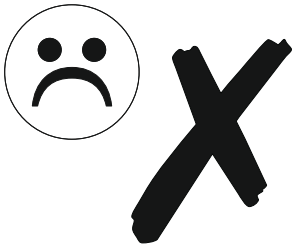

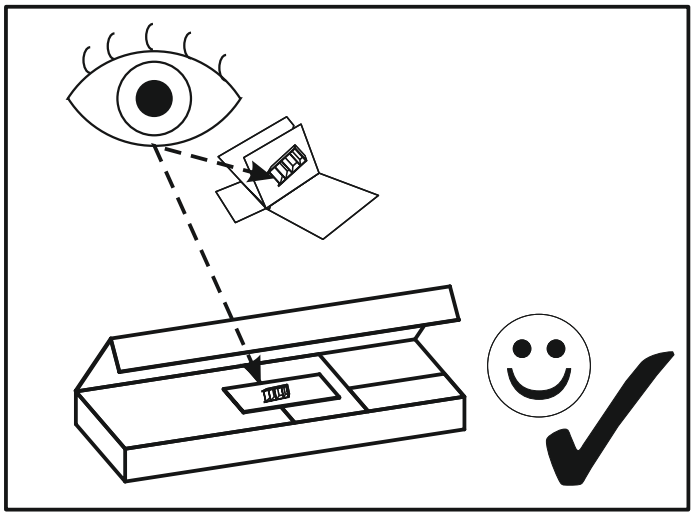

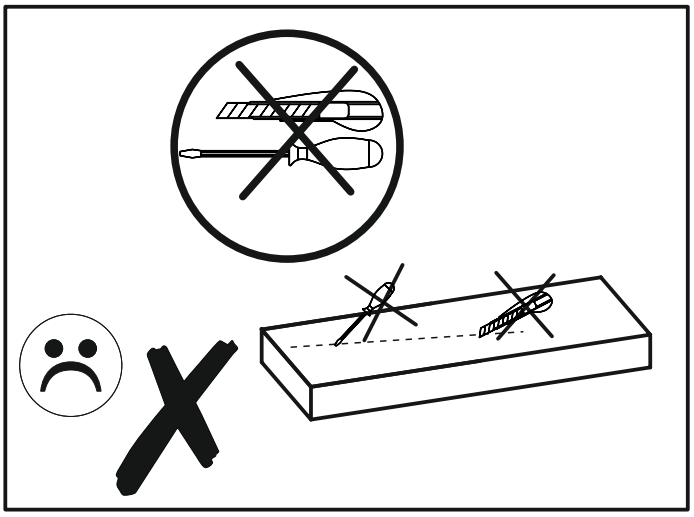

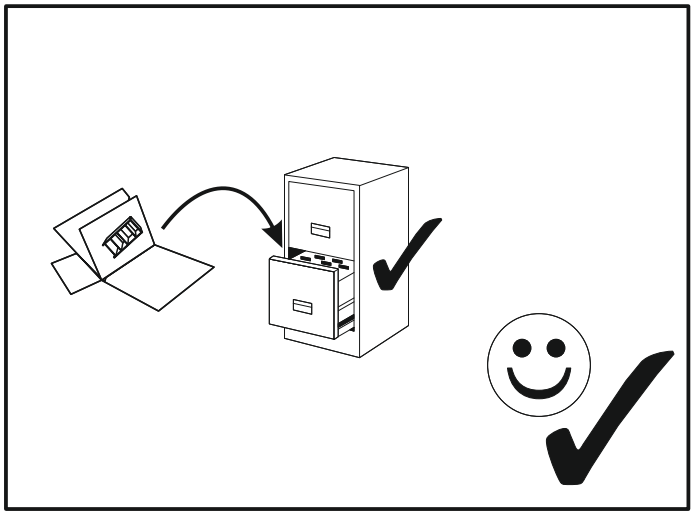

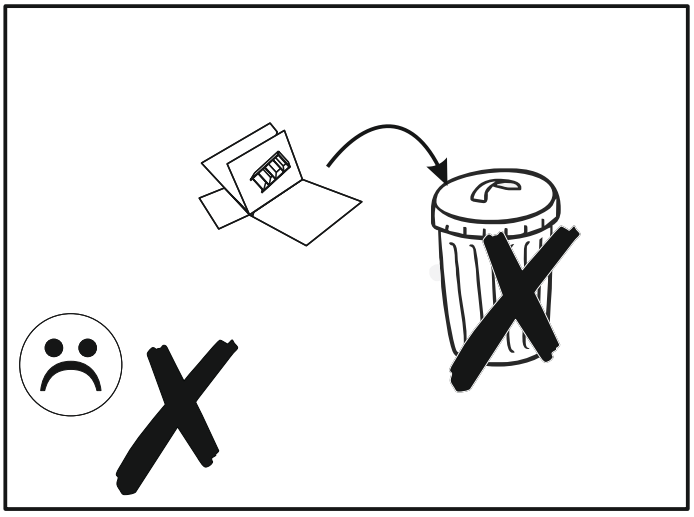

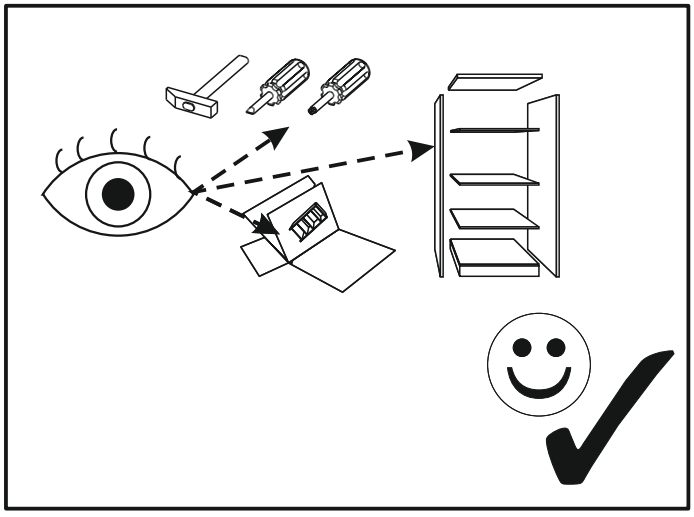

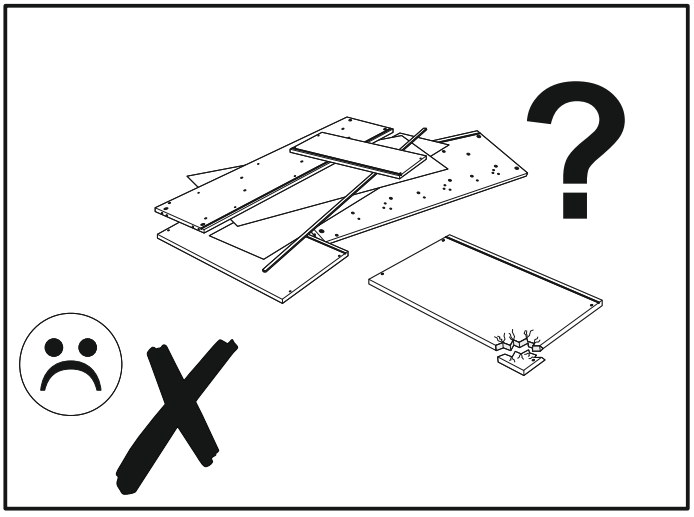

LYOZ07

A1	8 x 35 mm	**x22**
A2	8 x 45 mm	**x2**
E0	Ø16	**x2**
E1	15 x 12 mm	**x9**
F1	6 x 34 mm	**x7**
F3	7 x 58 mm	**x1**
G0		**x2**
G1	7 x 50 mm	**x10**
M		**x1**
I0	3 x 13 mm	**x12**
N2	3,5 X 16 mm	**x16**
O2		**x3**
O5		**x6**
W5		**x4**

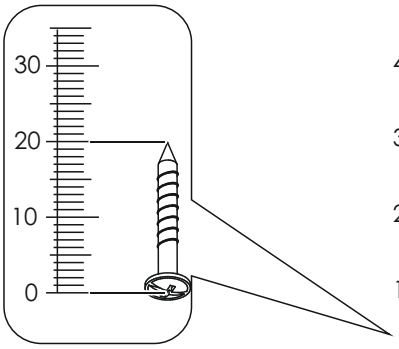

LYOZ07

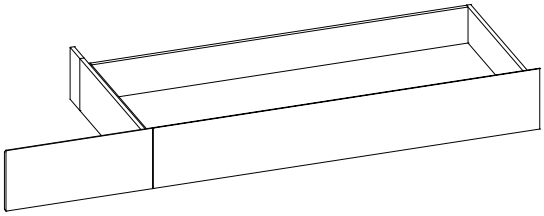

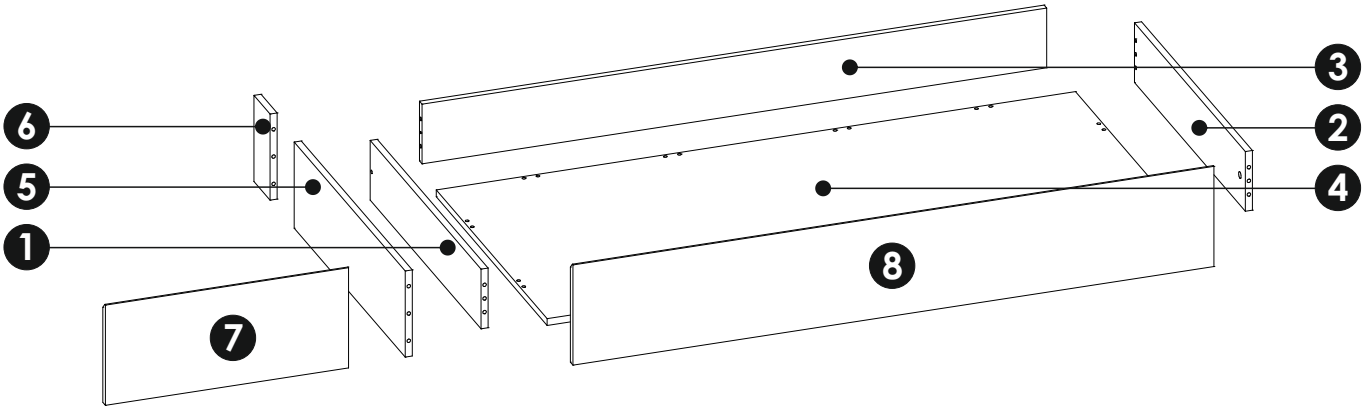

1	689	140	16	x1	1/1
2	689	140	16	x1	1/1
3	1413	140	16	x1	1/1
4	1446	689	16	x1	1/1
5	690	202	16	x1	1/1
6	100	202	16	x1	1/1
7	550	235	16	x1	1/1
8	1450	235	16	x1	1/1

LYOZ07

LYOZ03

LYOZ01

1▶ - 17▶

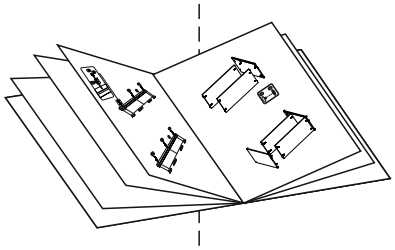

18▶ - 32▶

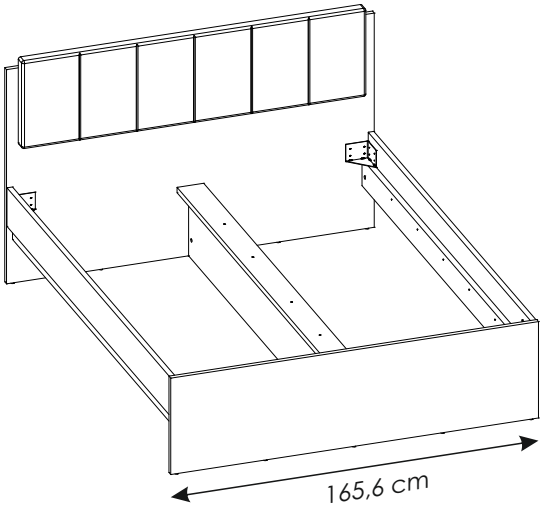

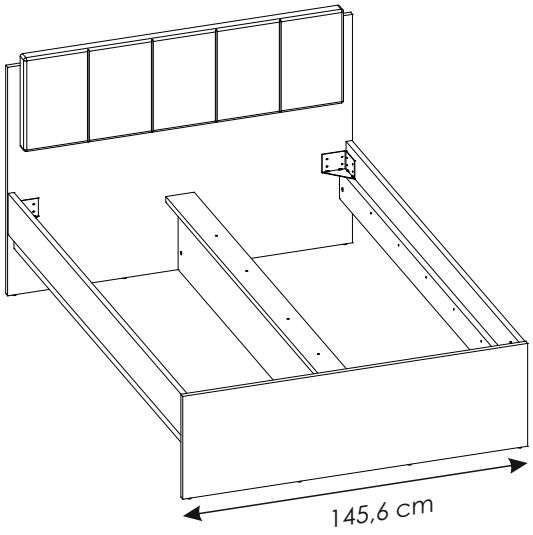

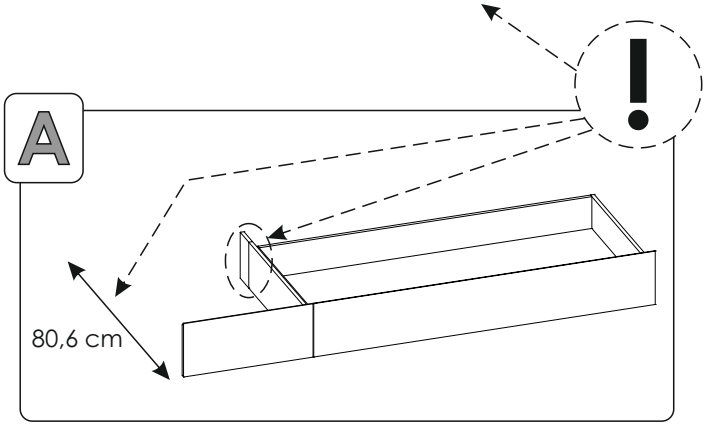

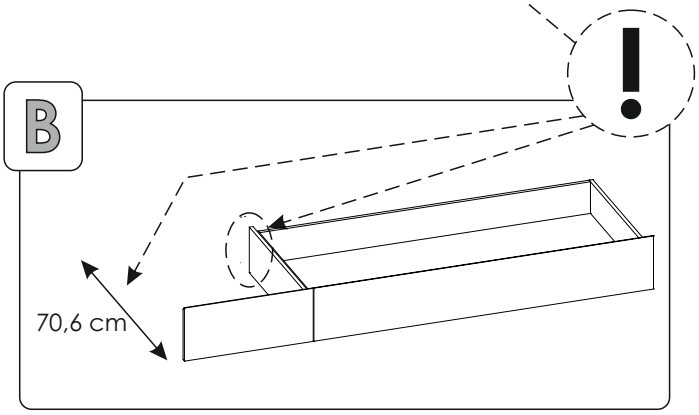

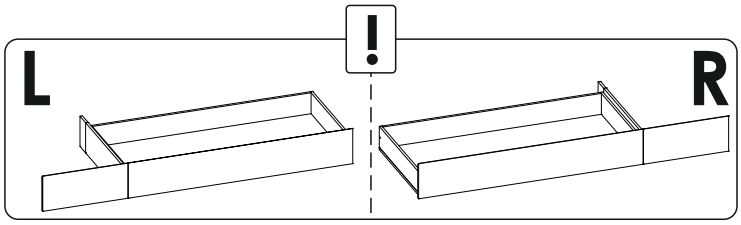

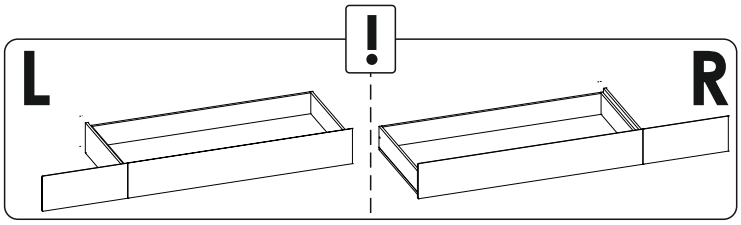

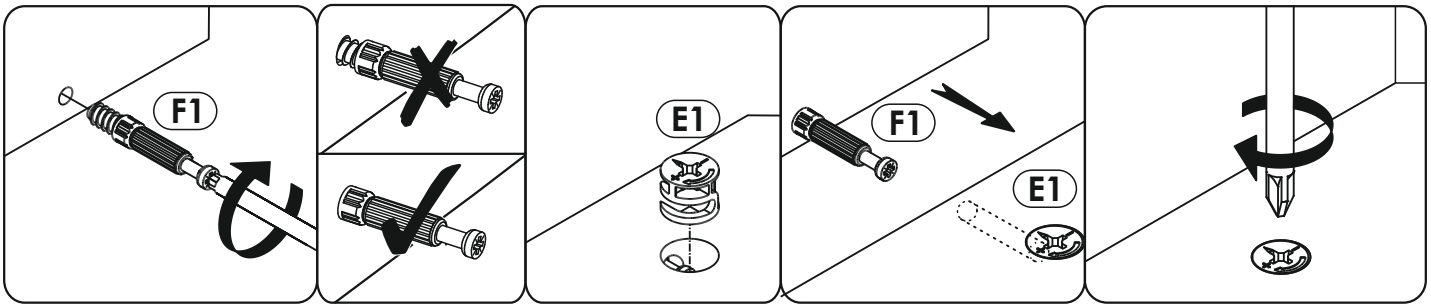

1

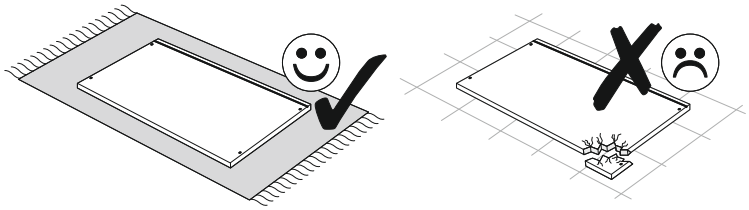

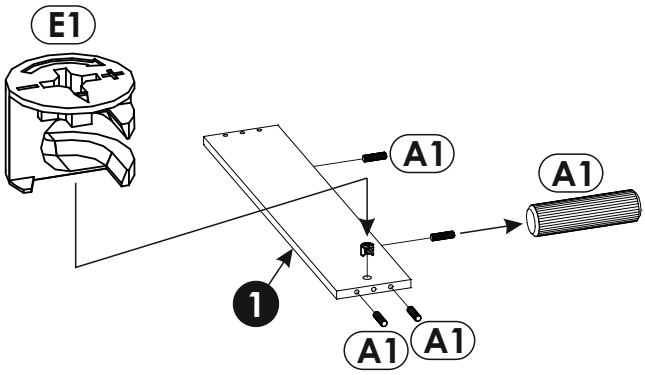

2

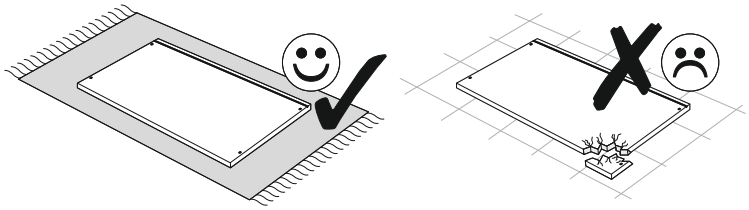

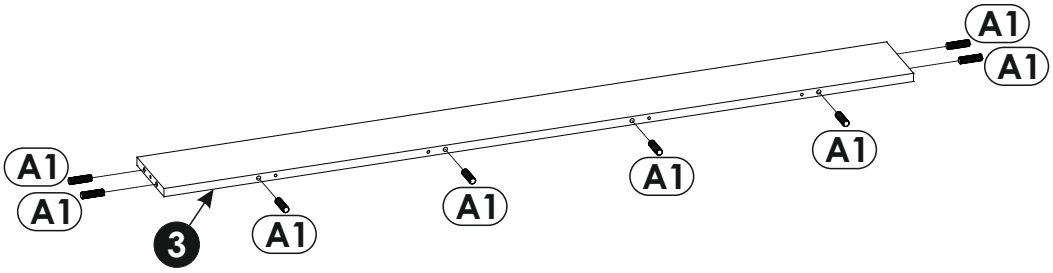

3

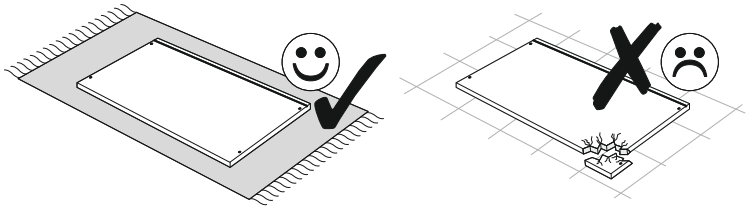

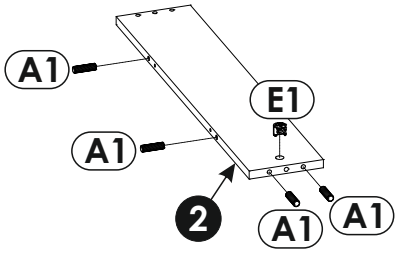

4

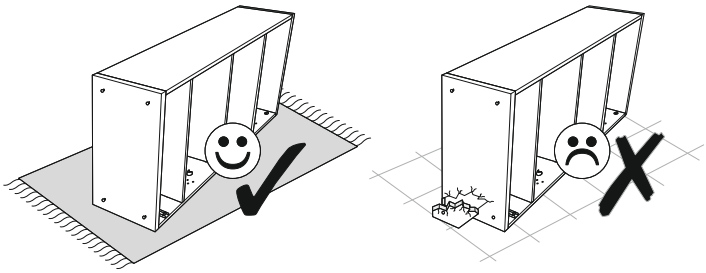

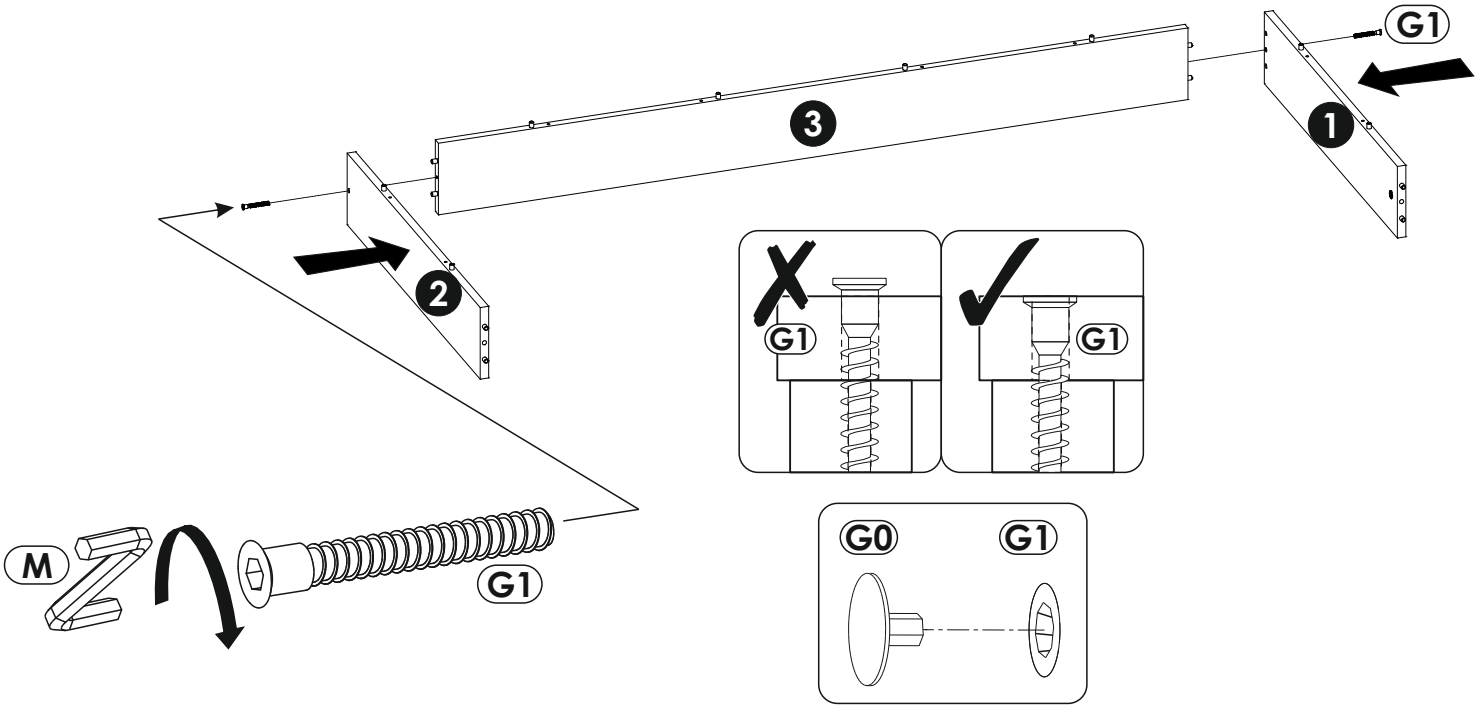

5

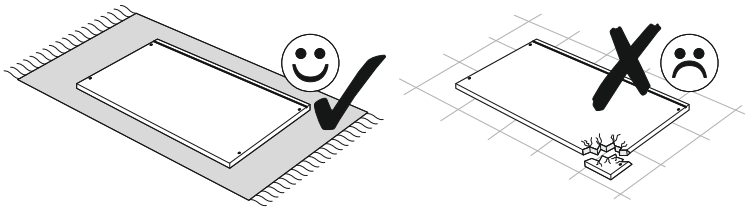

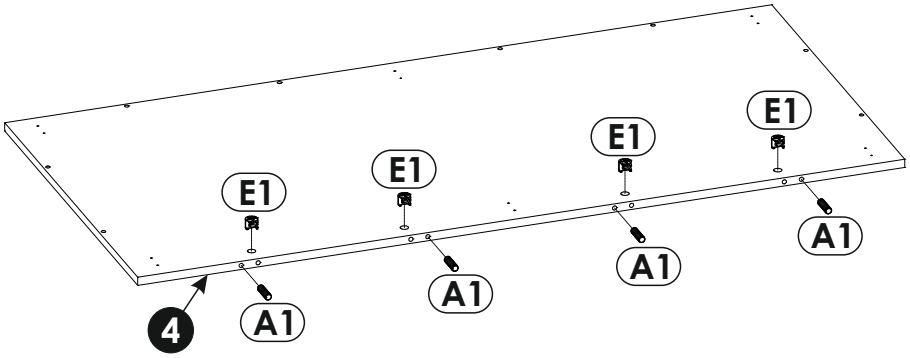

6

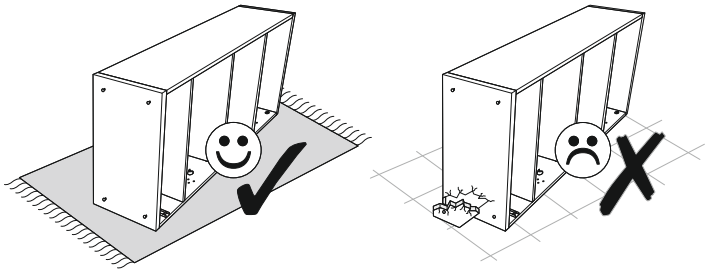

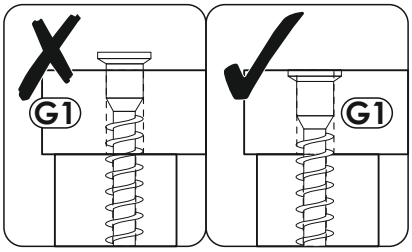

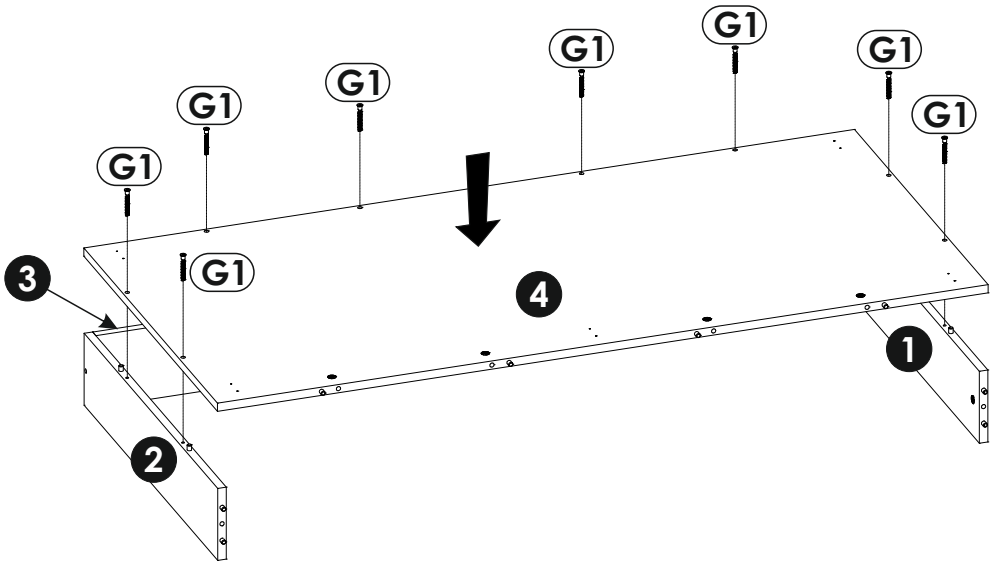

7

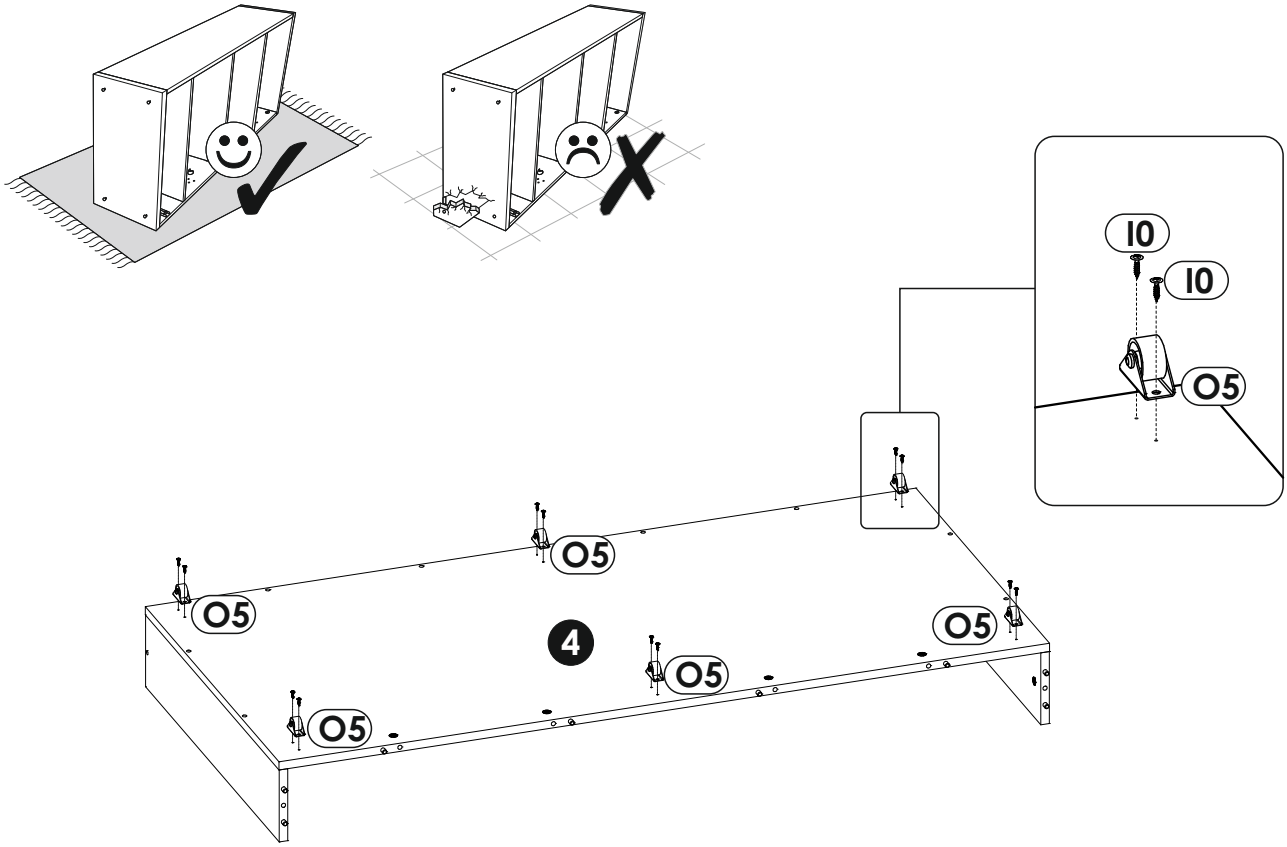

8

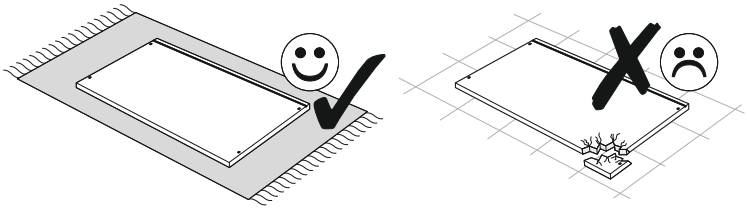

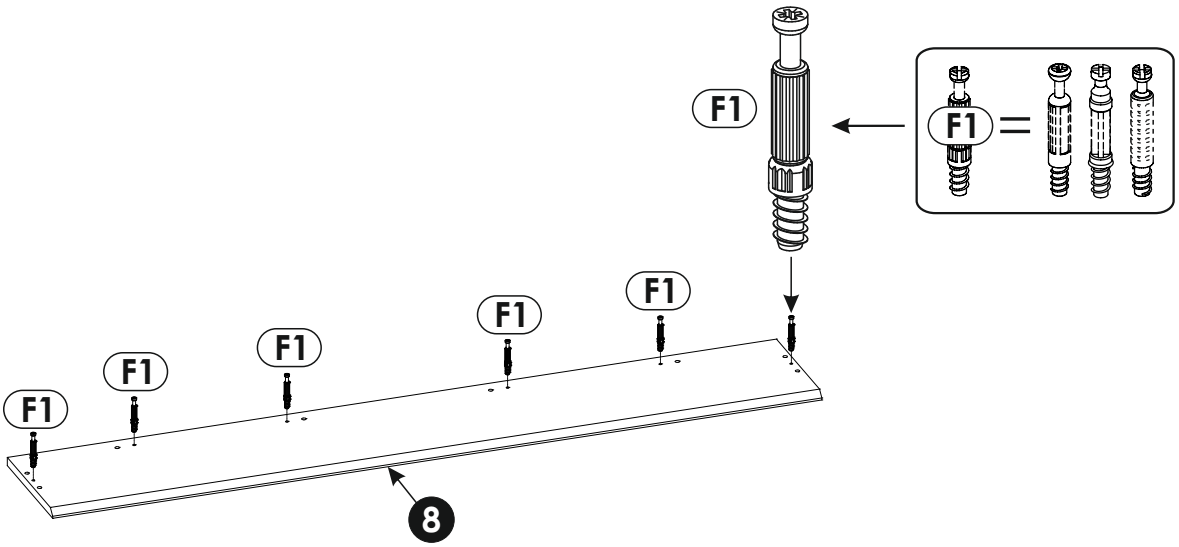

9

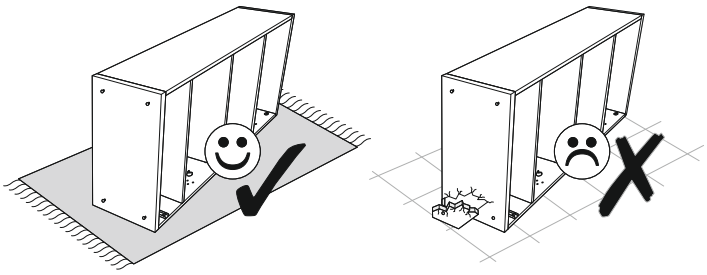

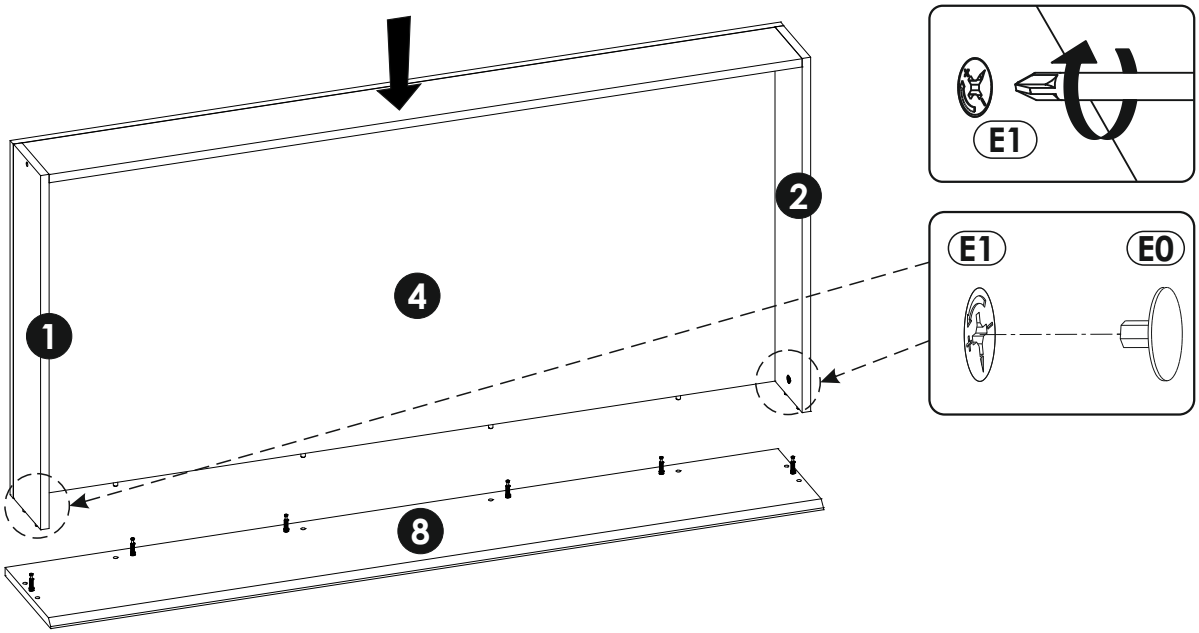

10

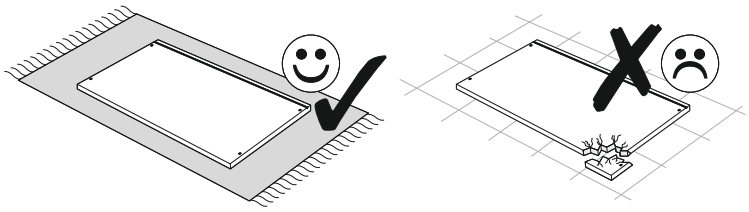

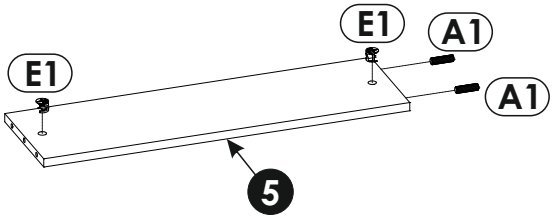

11

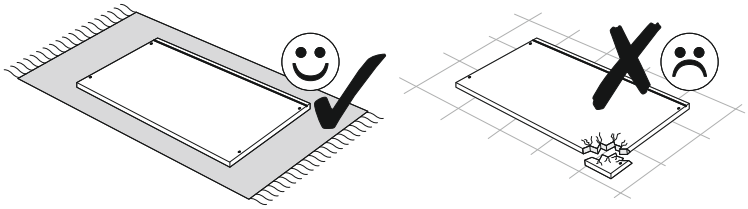

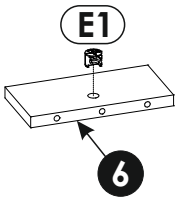

12

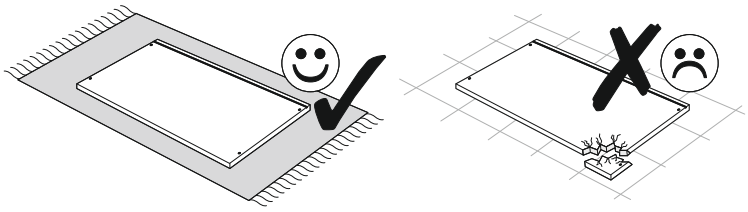

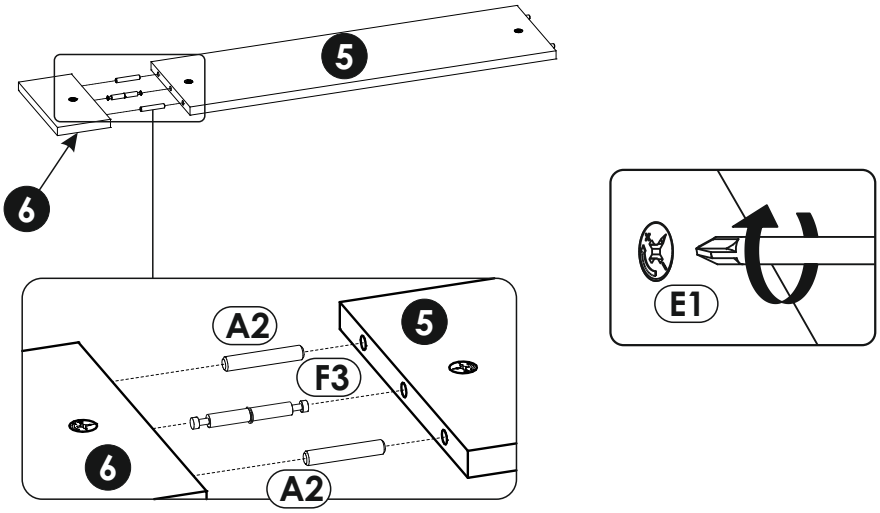

13

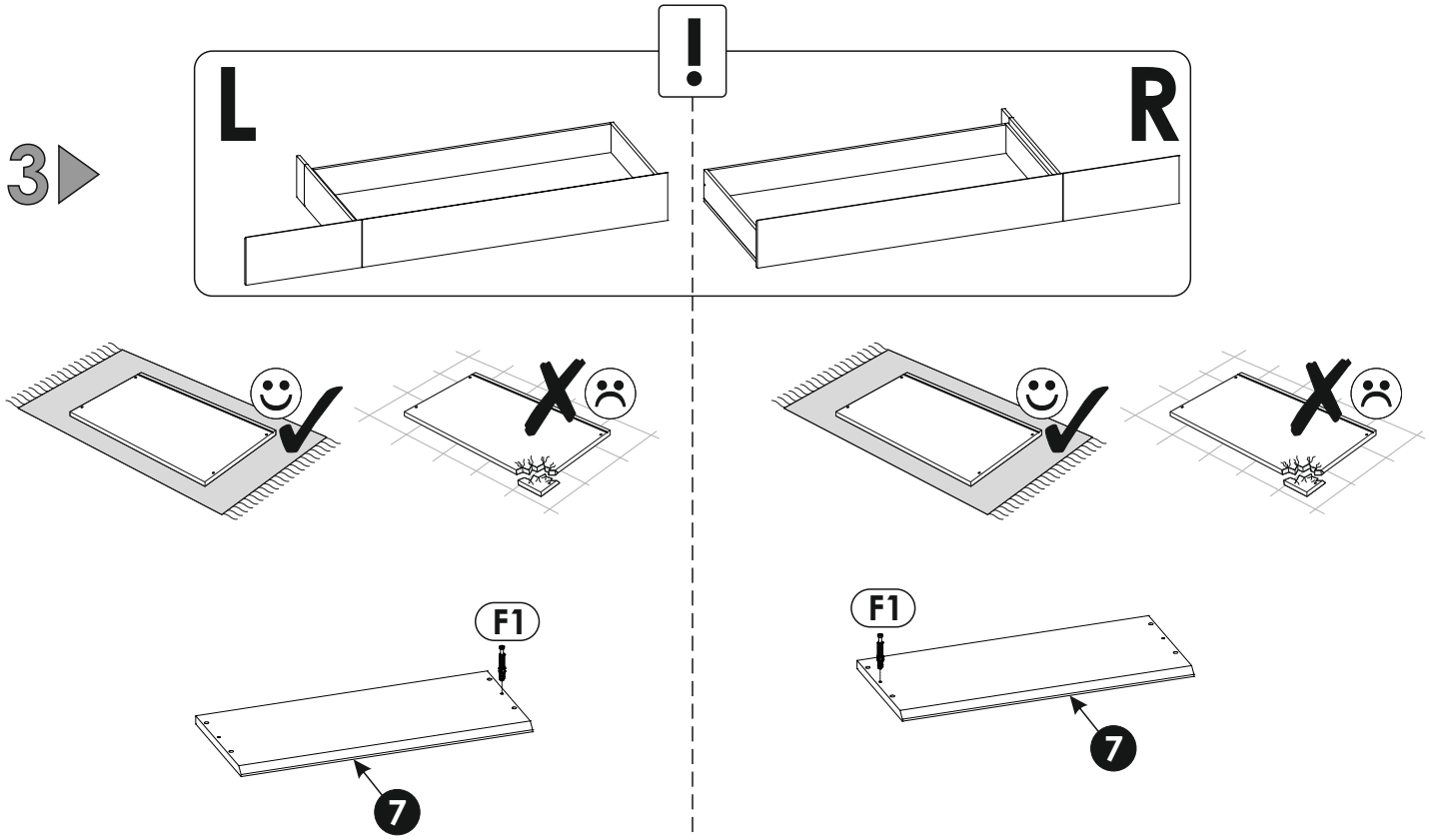

14

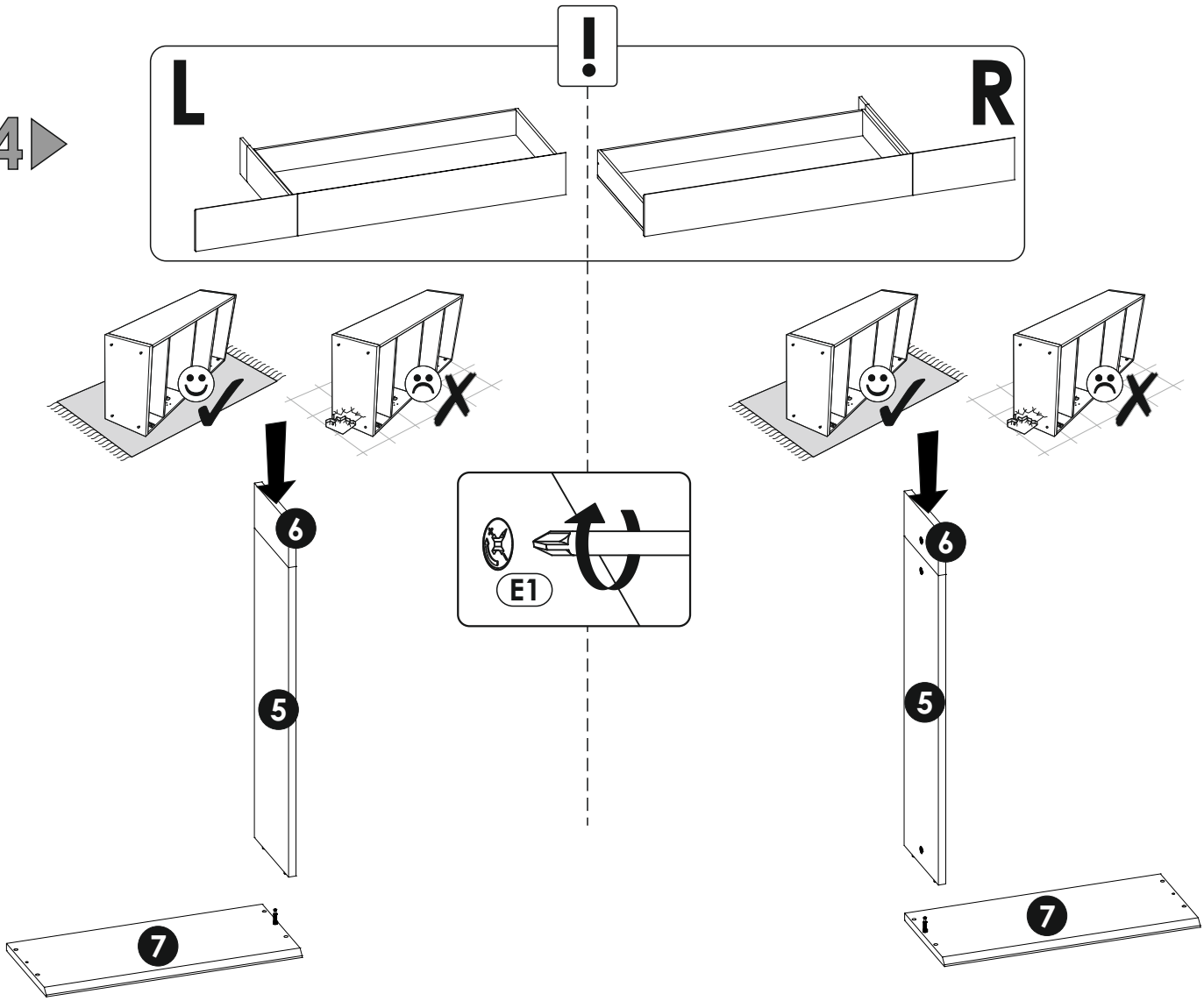

15

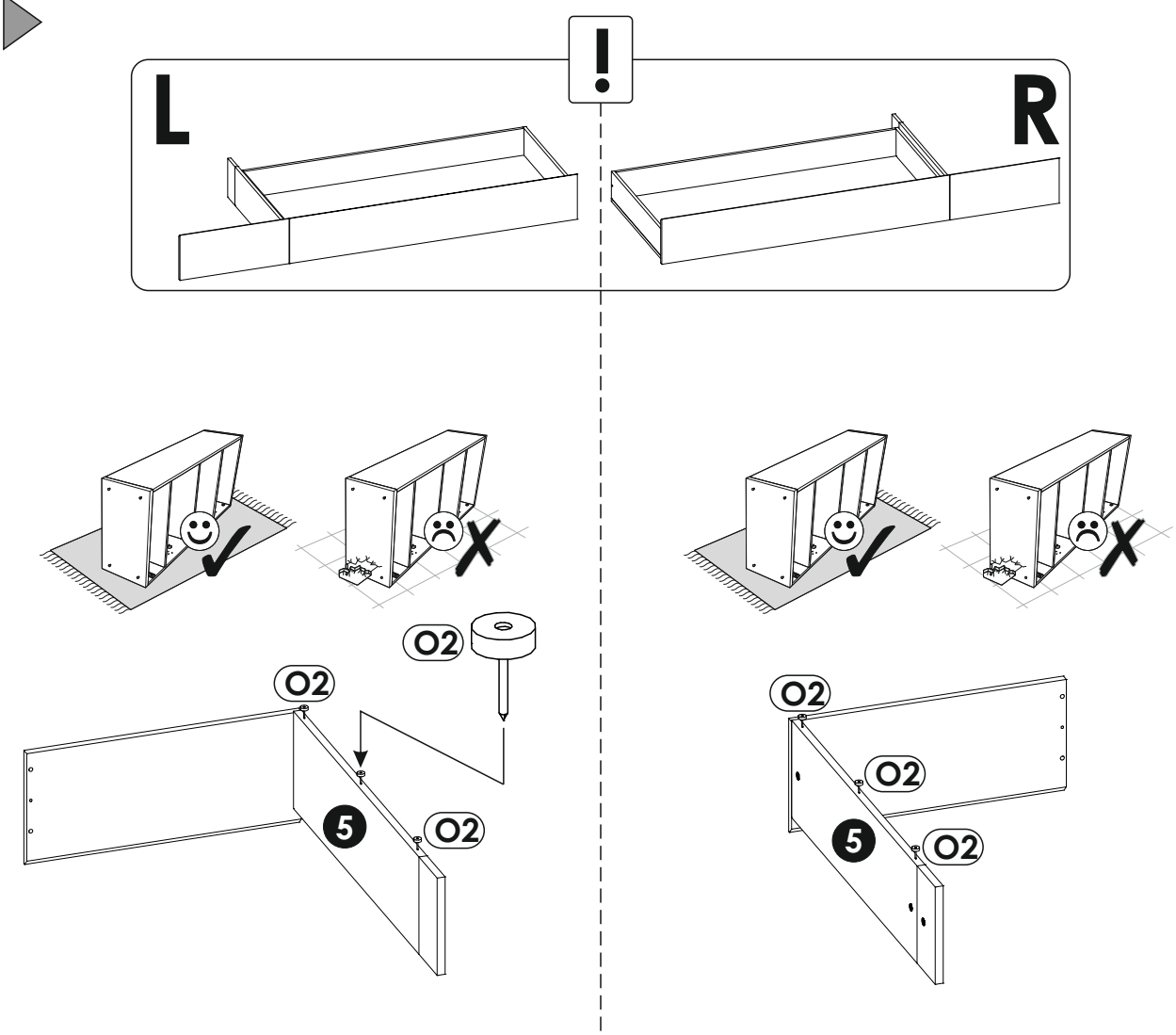

16

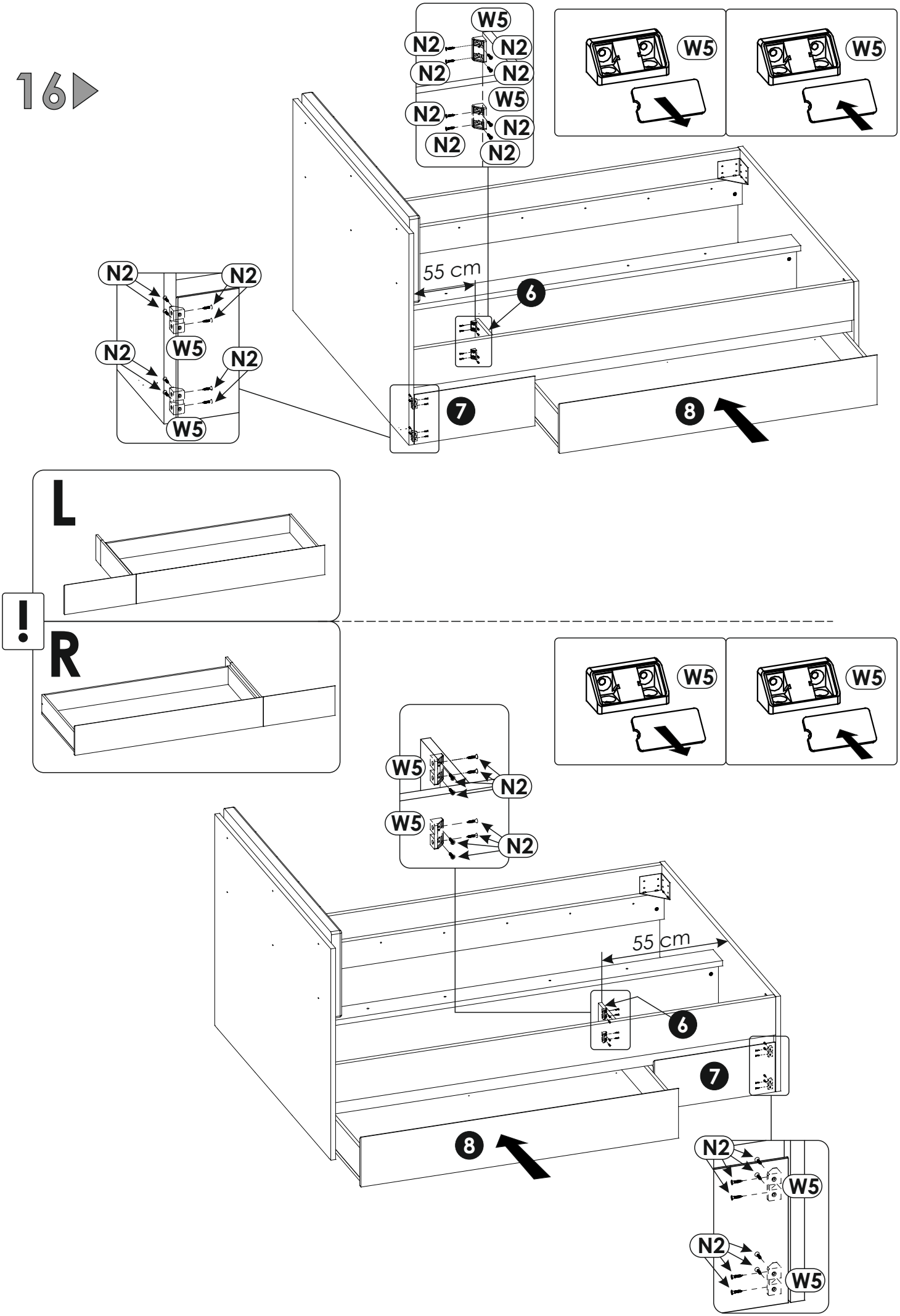
W5
N2
N2
N2
N2
W5
N2
N2
N2
N2
W5
W5
N2
N2
N2
W5
N2
W5
55 cm
6
7
8
L
!
R
W5
W5
W5
N2
W5
N2
55 cm
6
7
8
N2
W5
N2
W5

17

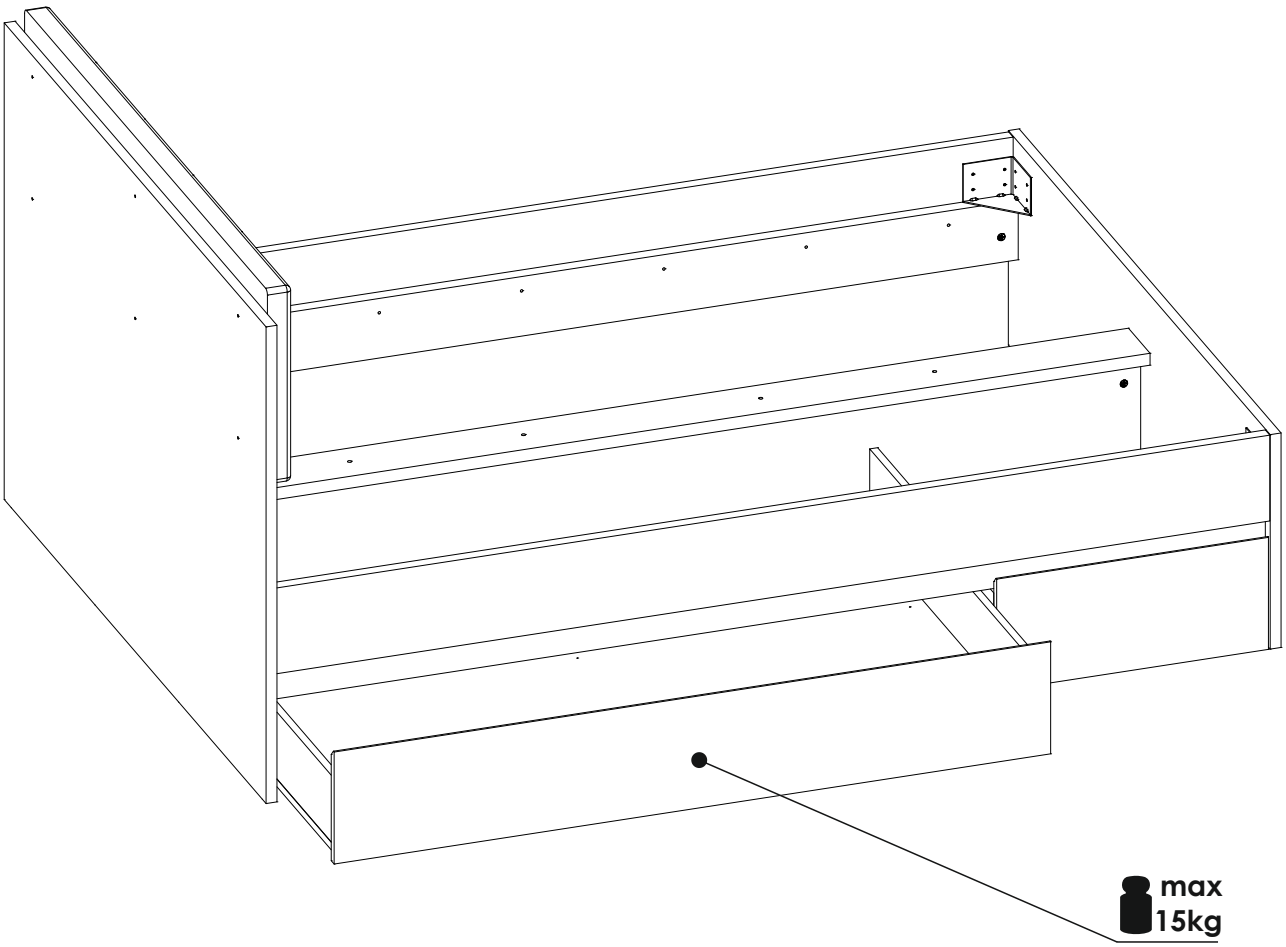

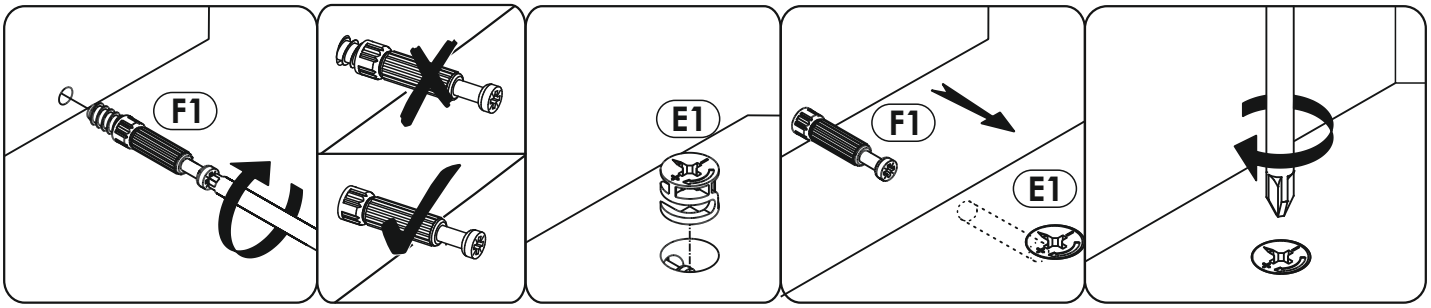

18

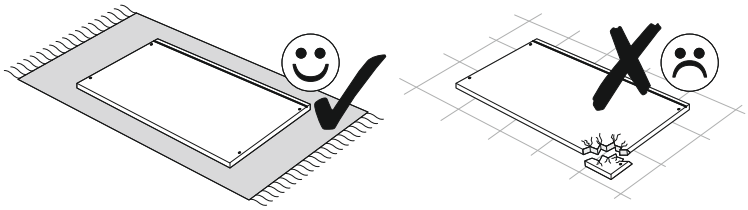

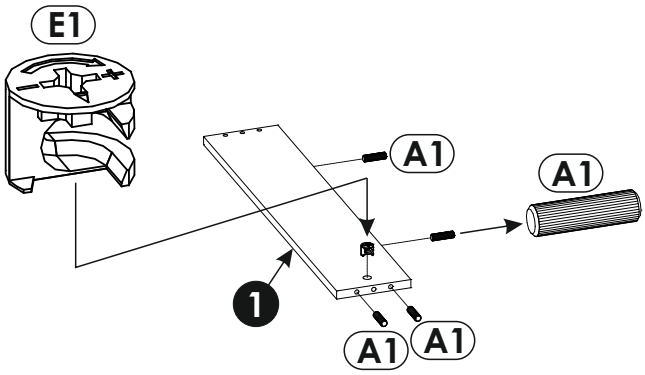

19

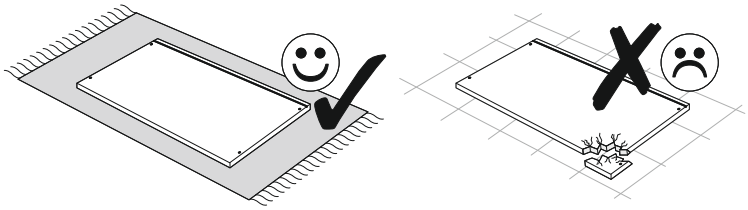

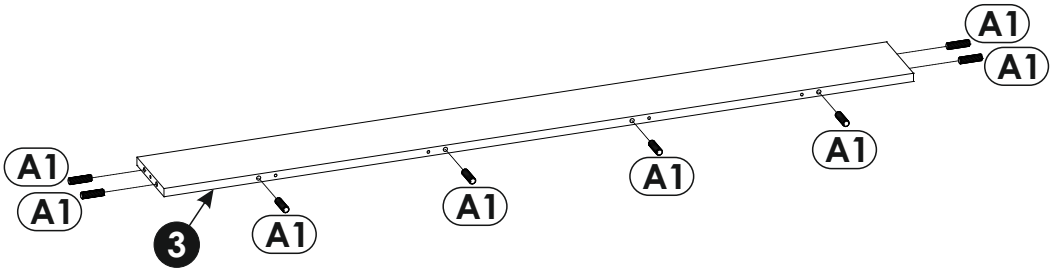

20

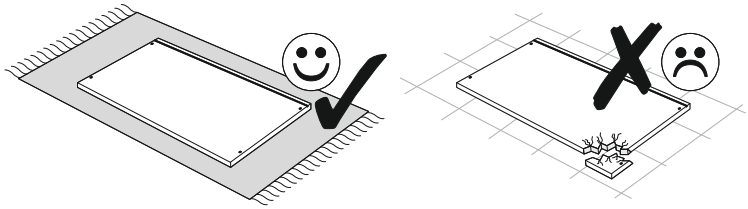

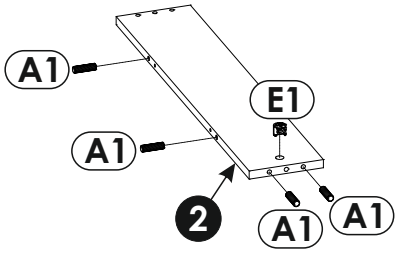

21

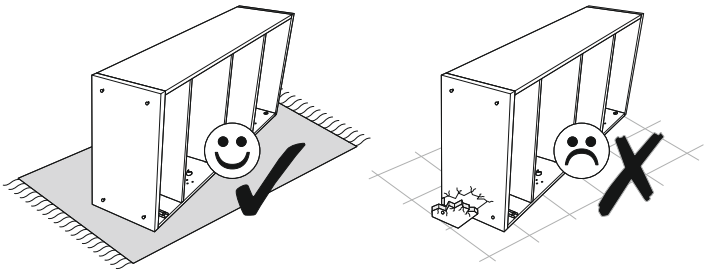

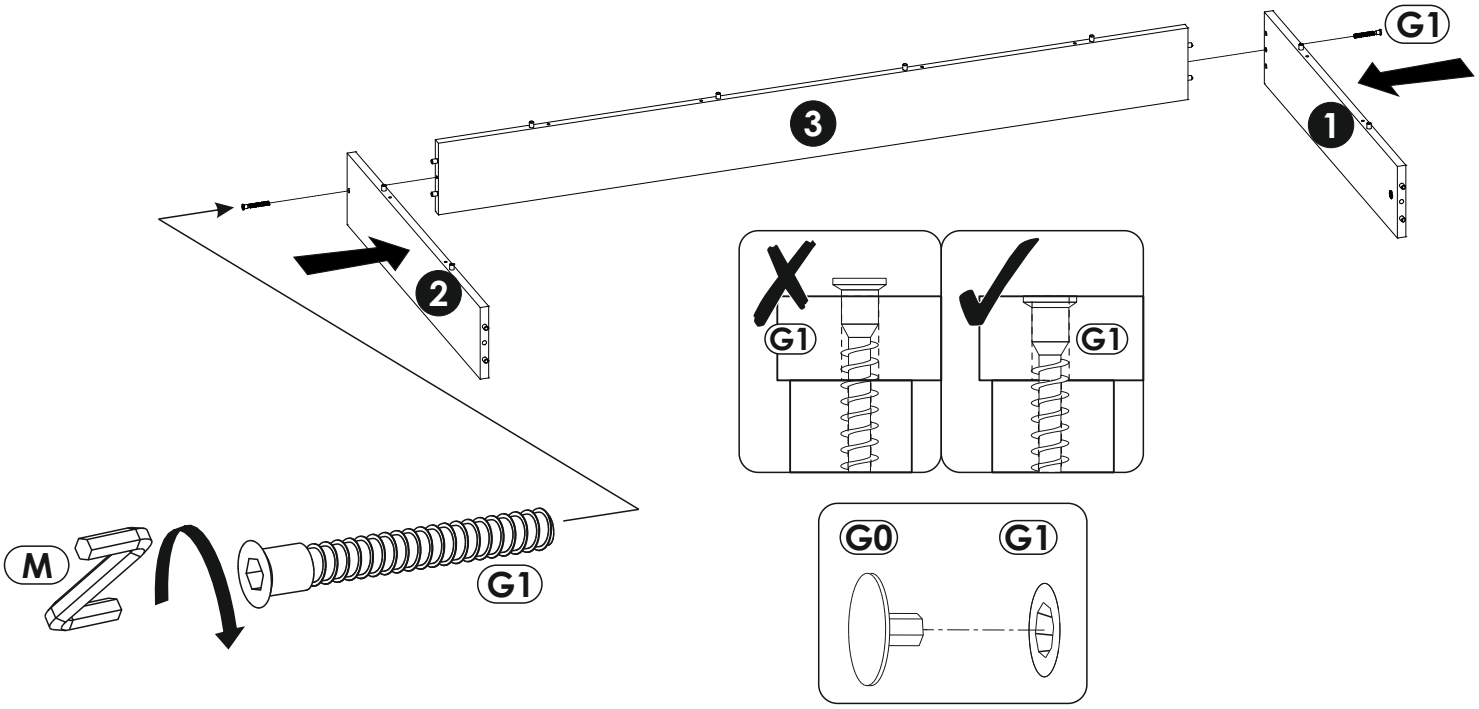

22

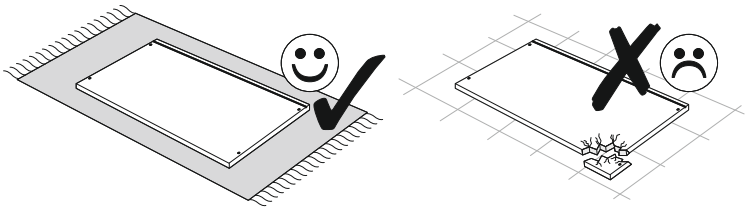

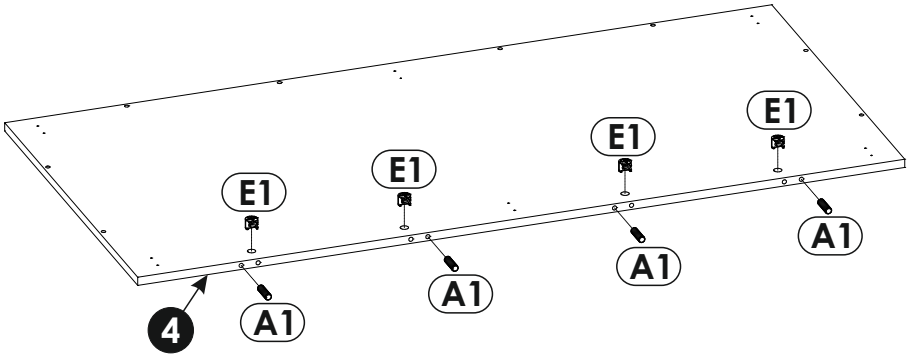

23

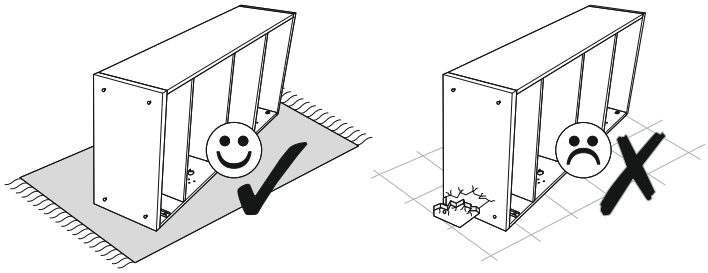

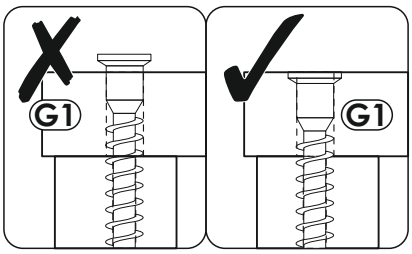

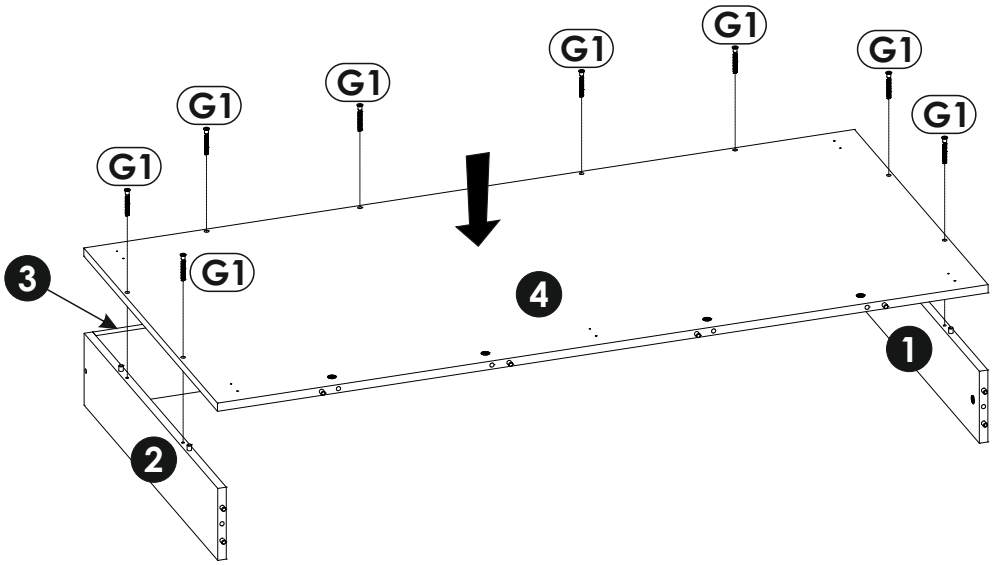

24

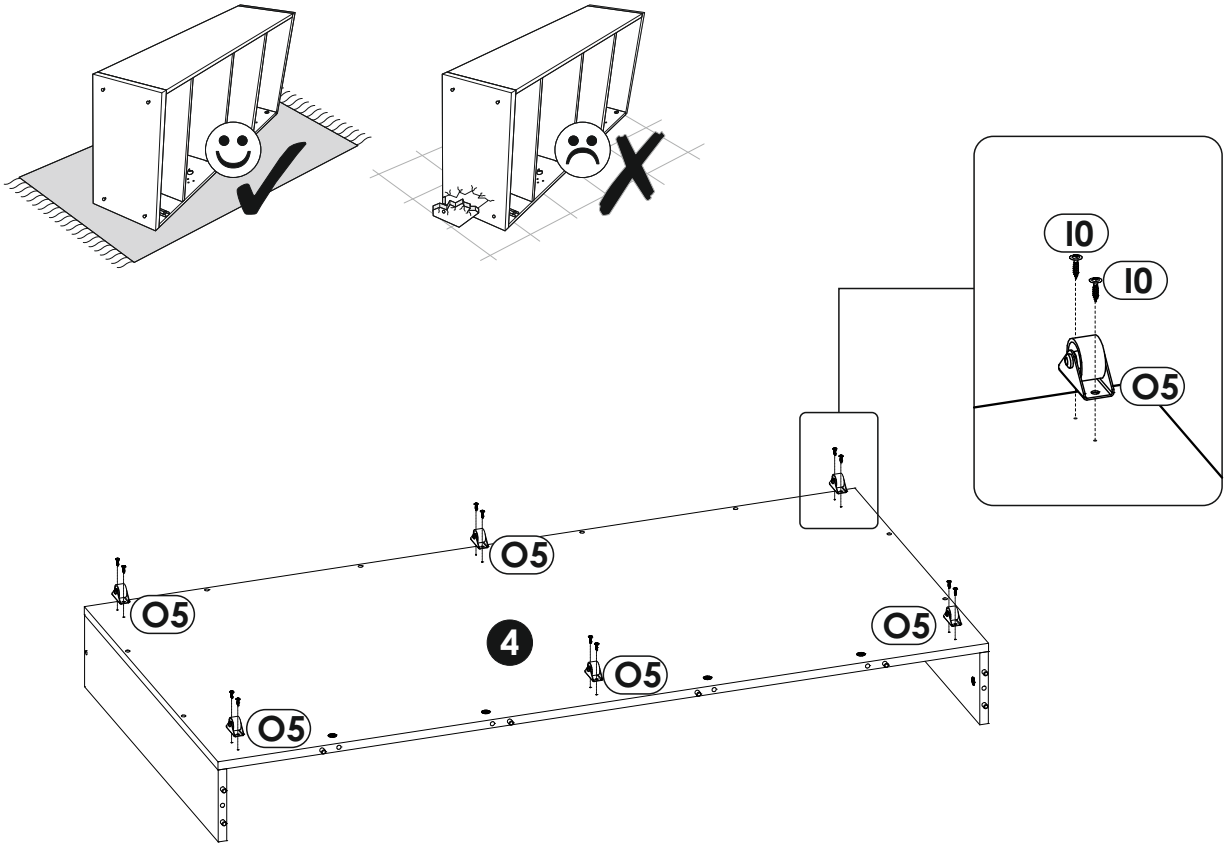

25

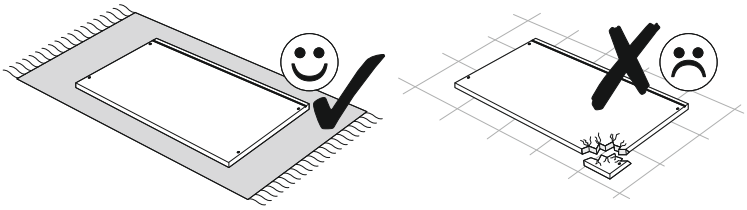

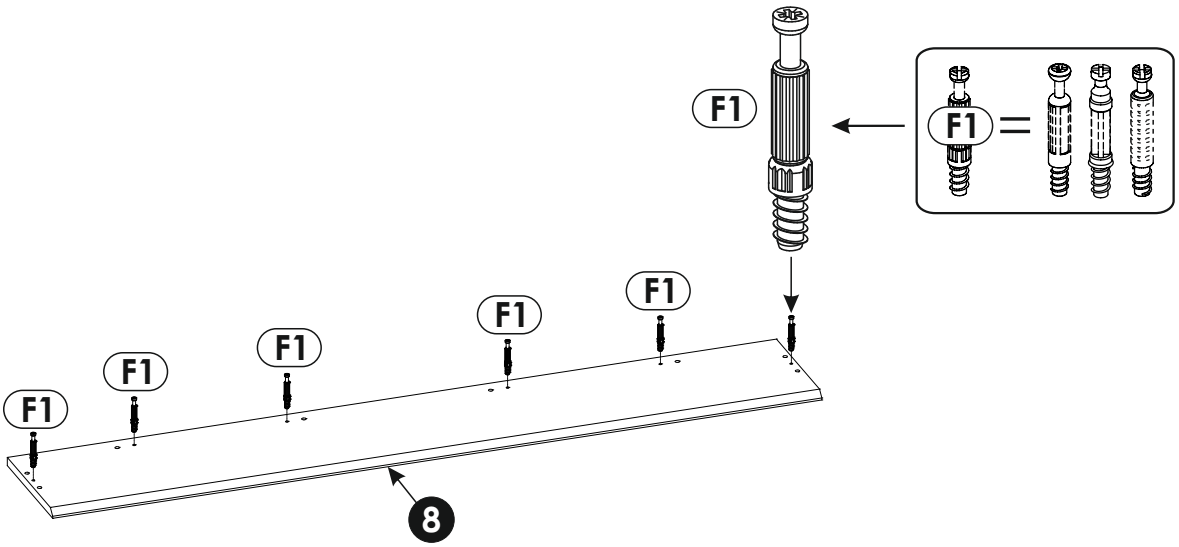

26

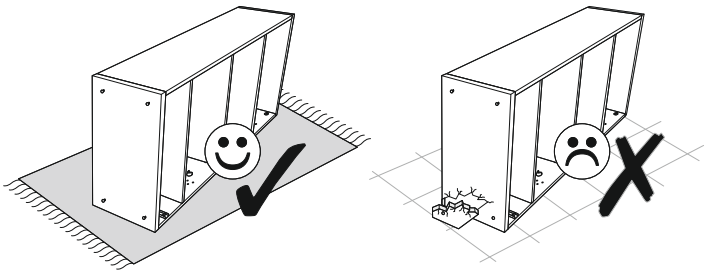

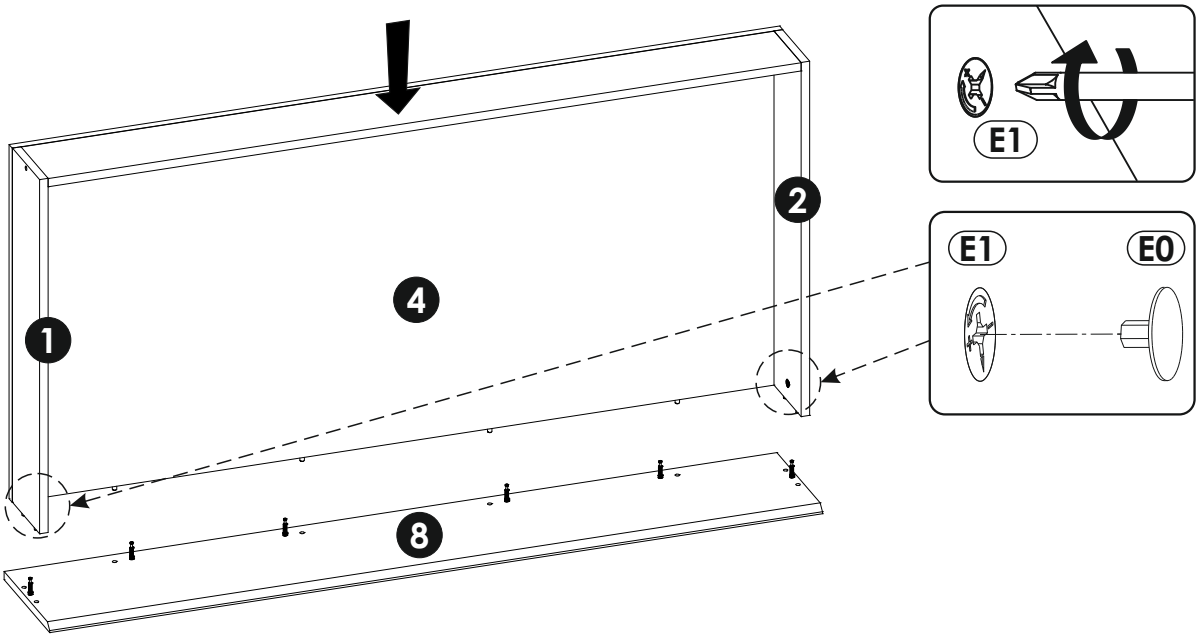

27

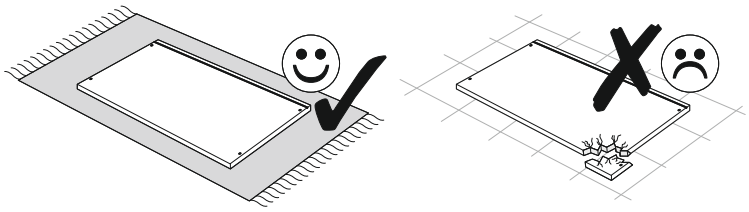

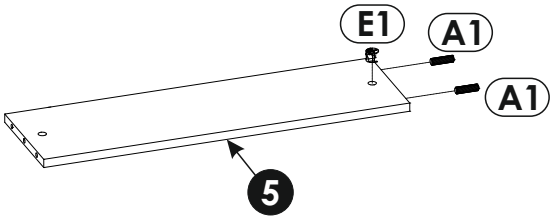

28

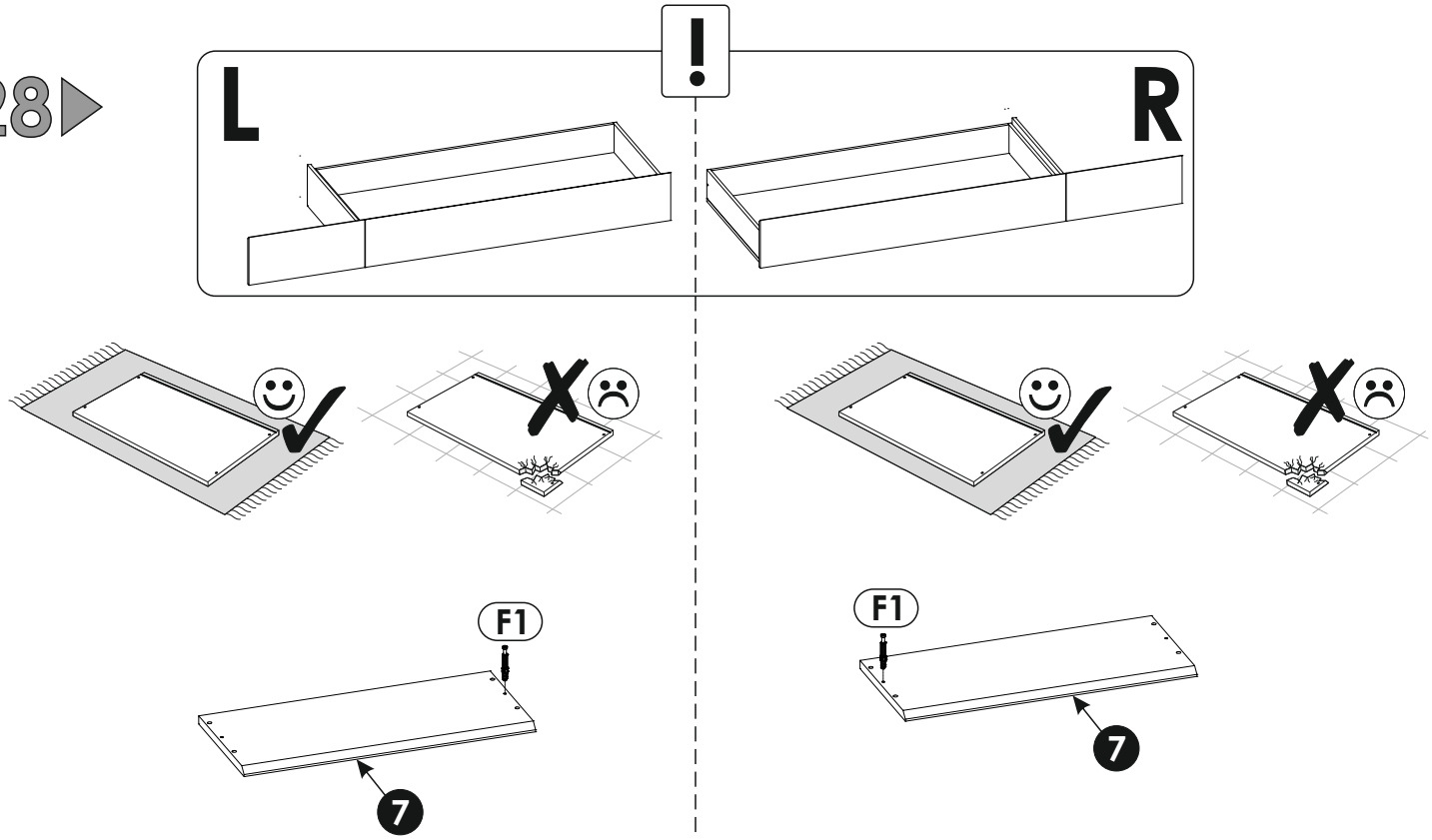

29

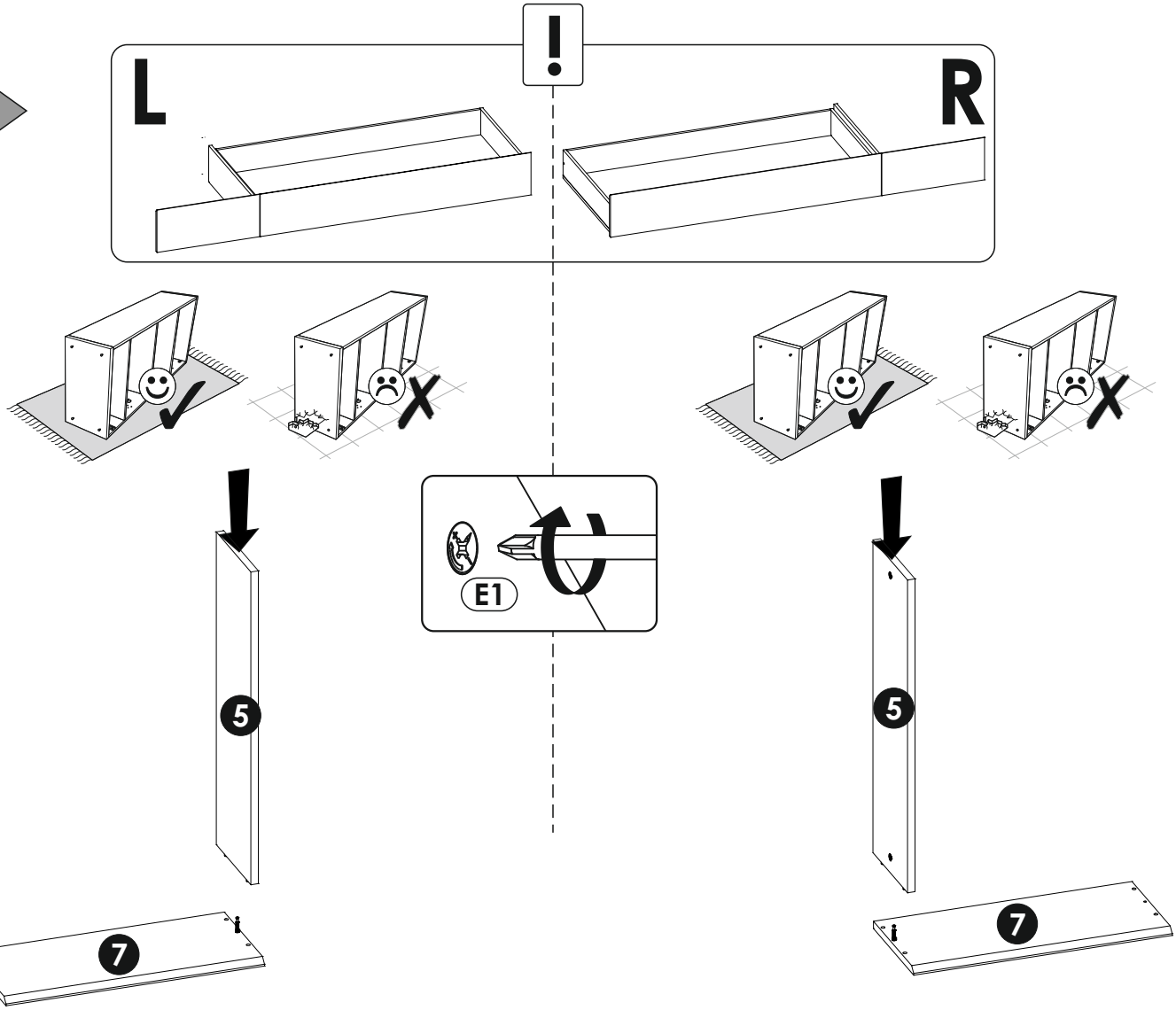

30

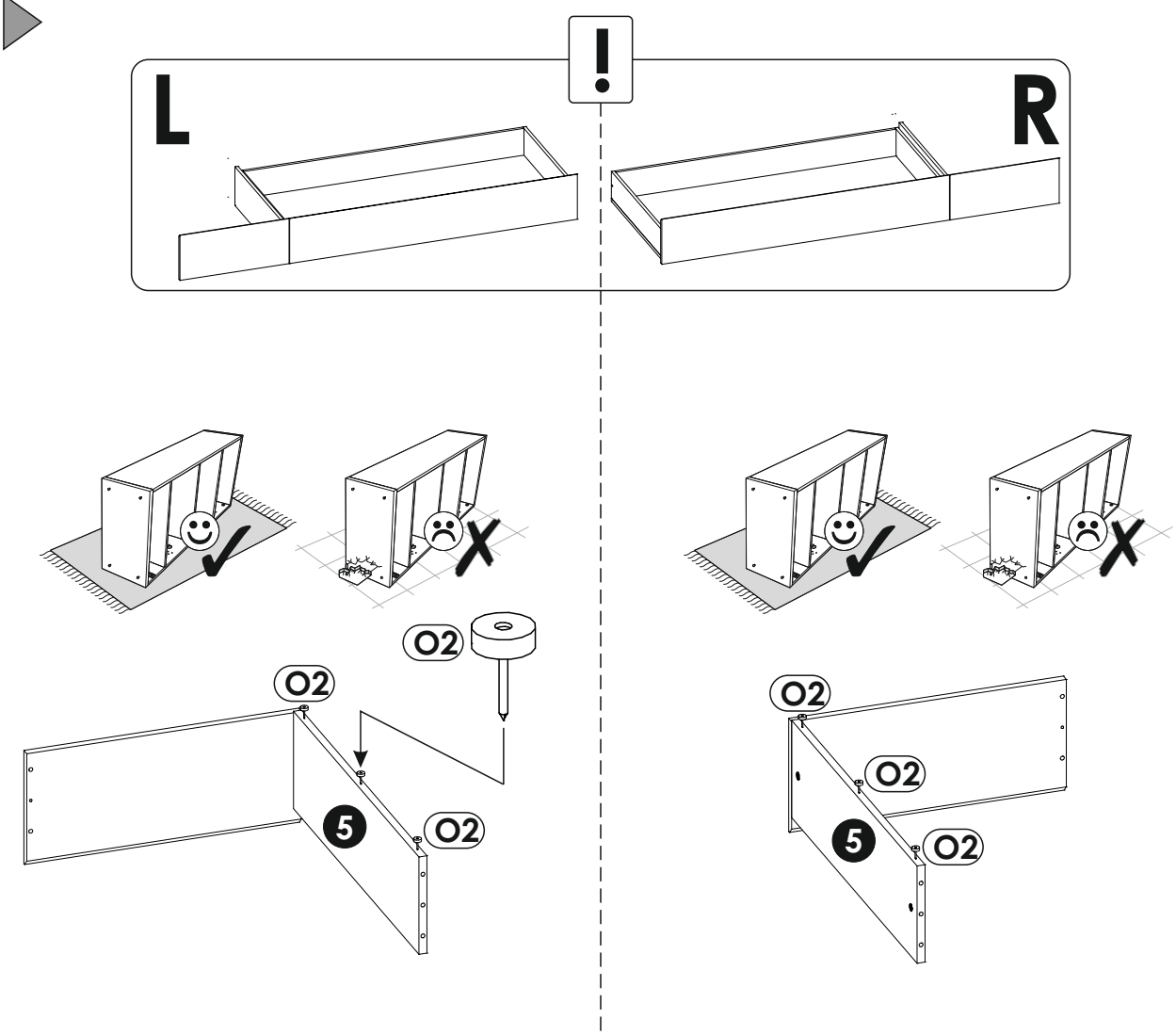

31

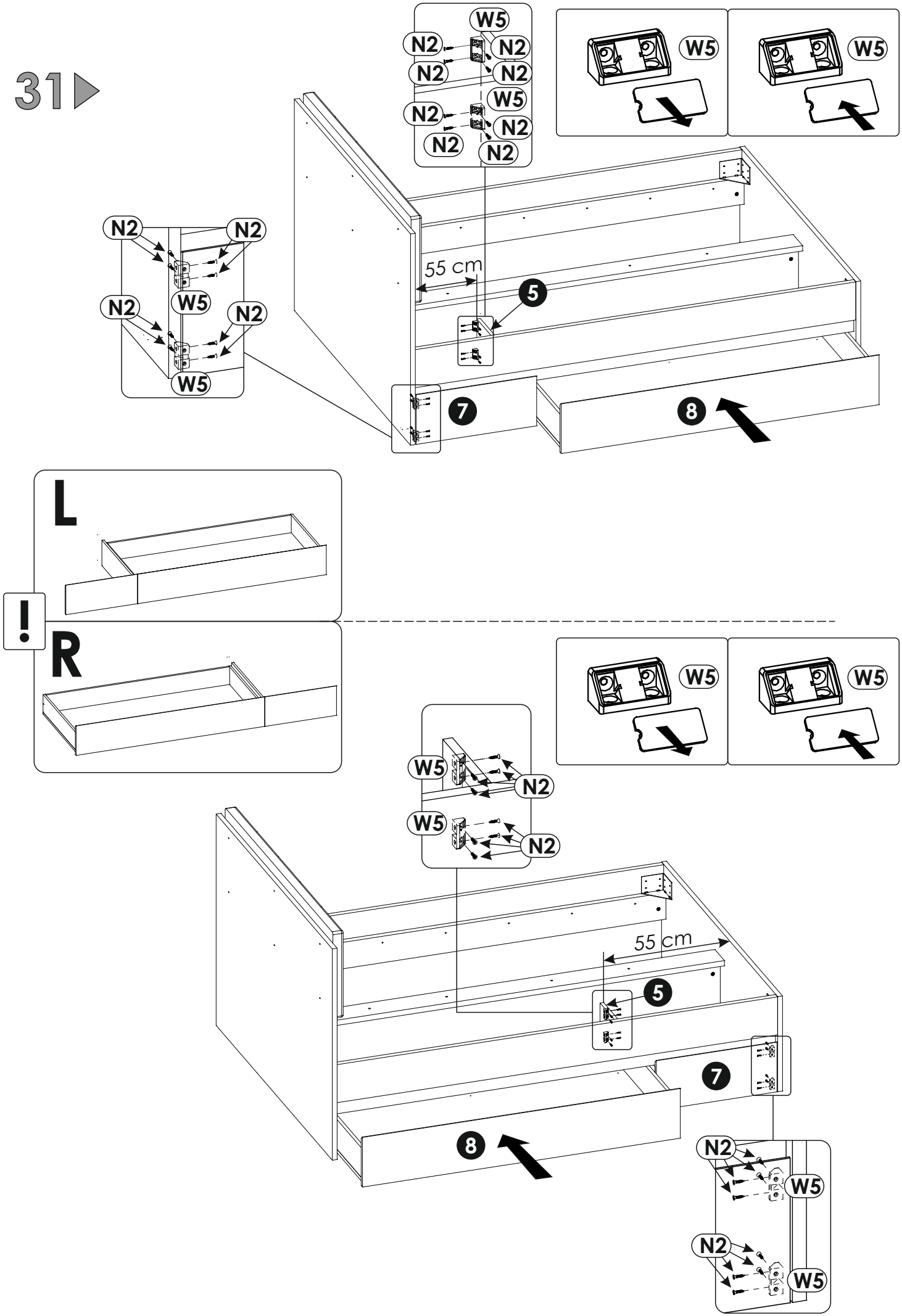
W5
N2
N2
N2
N2
W5
N2
N2
N2
N2
W5
W5
N2
N2
W5
N2
N2
W5
55 cm
5
7
8
L
!
R
W5
W5
W5
N2
W5
N2
55 cm
5
7
8
N2
W5
N2
W5

32

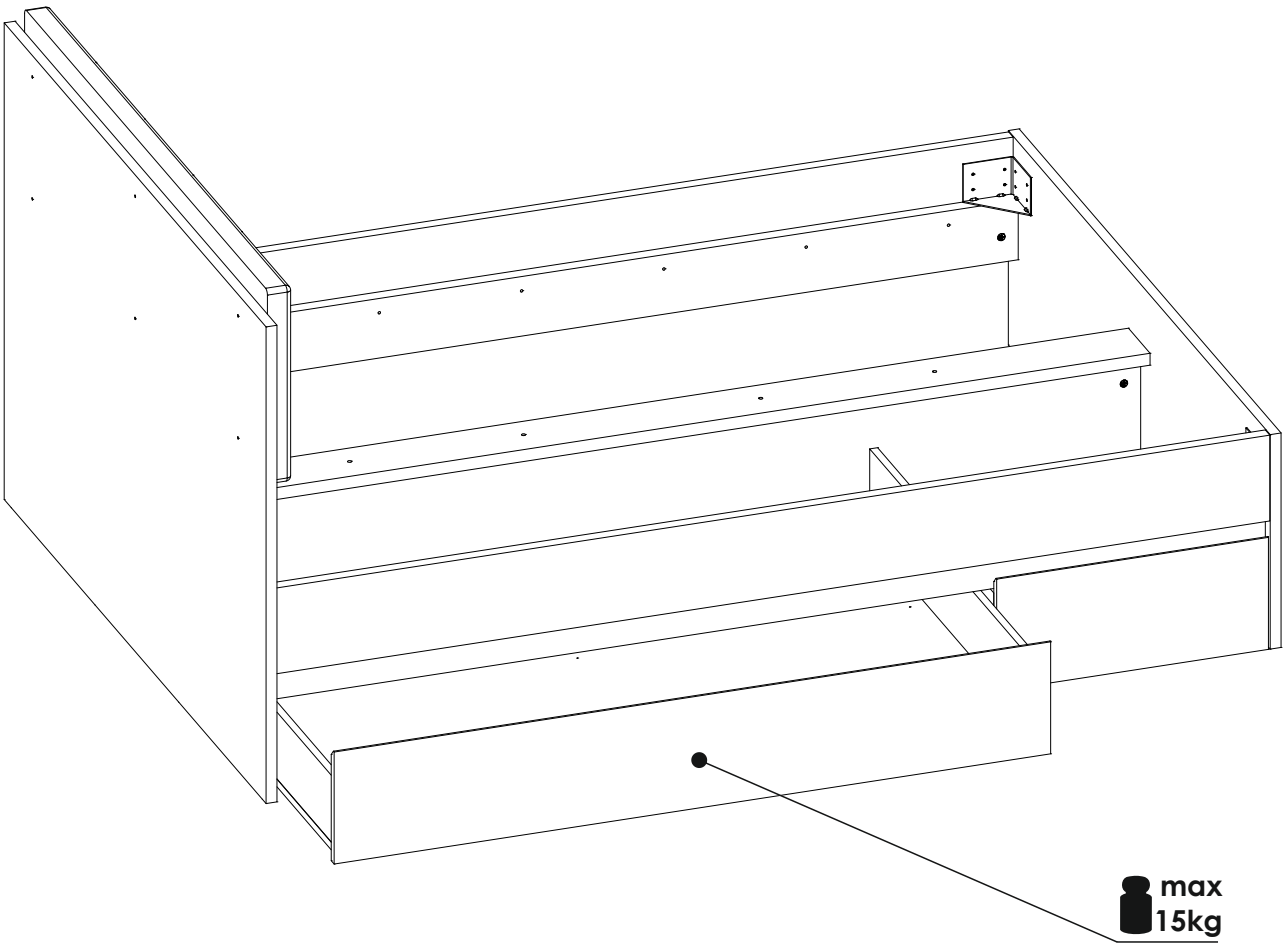

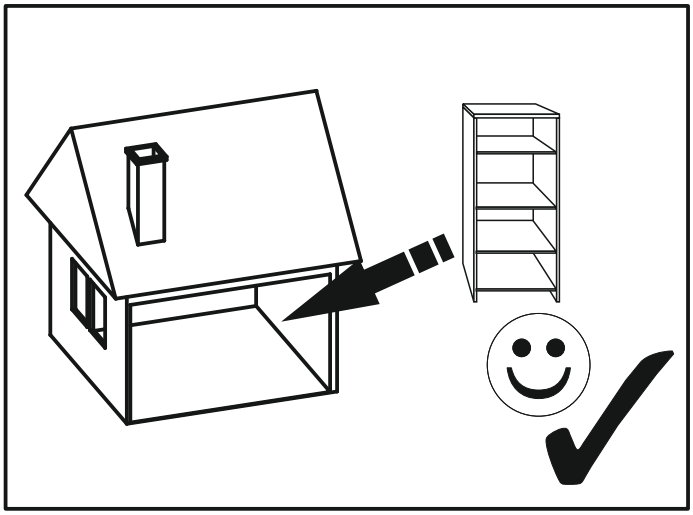

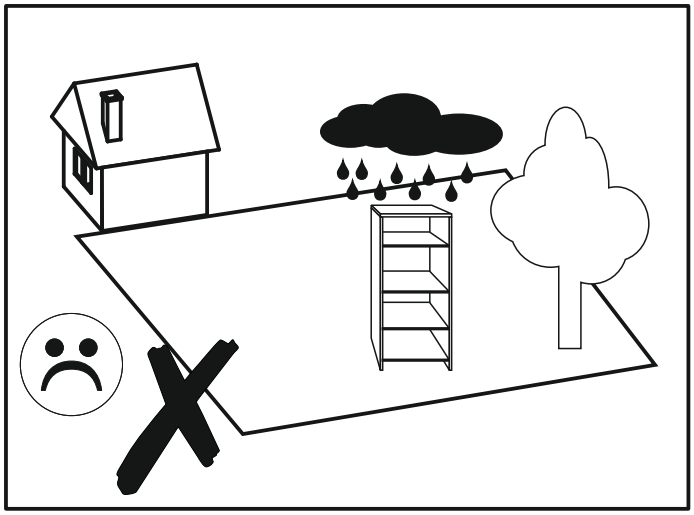

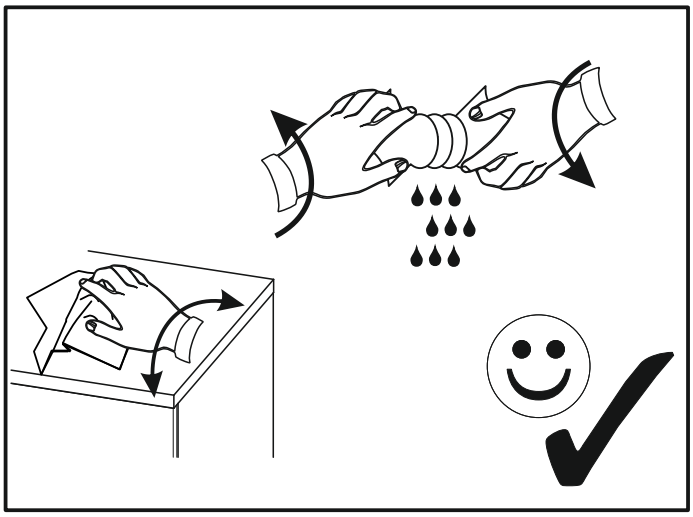

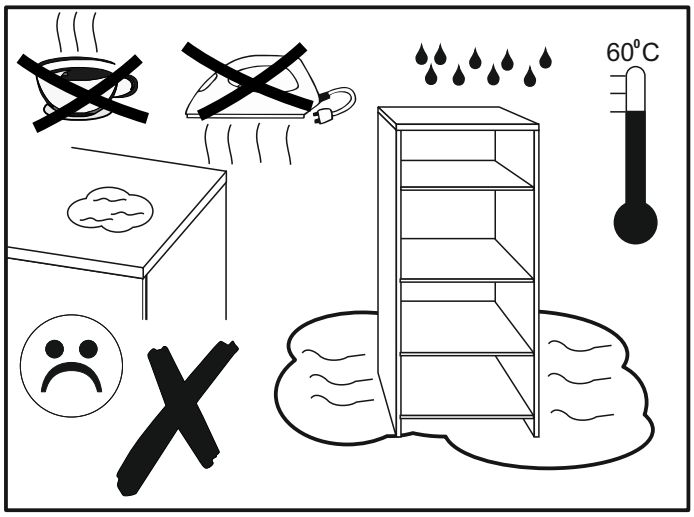
60°C

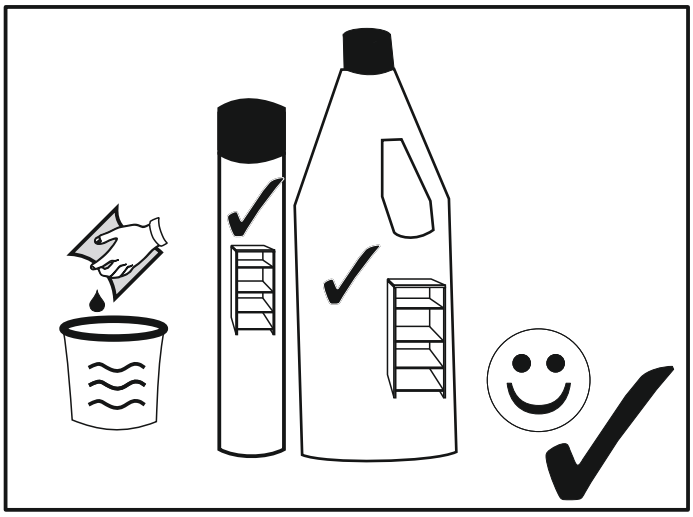

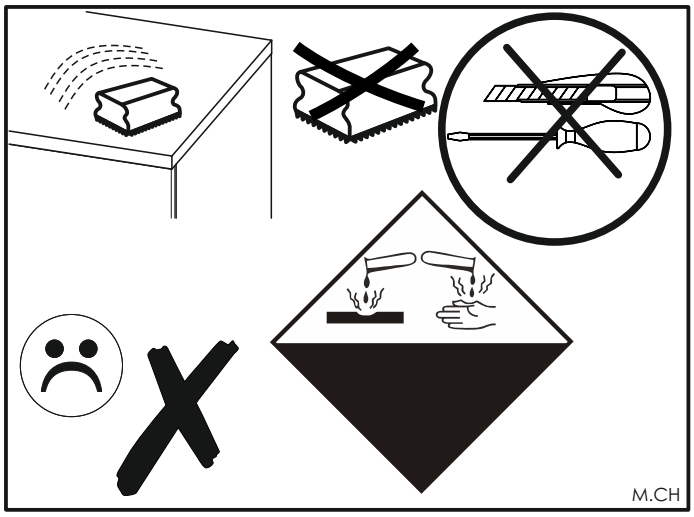
M.CH